NUREG-0782
Vol. 2

Draft Environmental Impact Statement on 10 CFR Part 61 "Licensing Requirements for Land Disposal of Radioactive Waste"

Main Report

U.S. Nuclear Regulatory Commission

Office of Nuclear Material Safety and Safeguards

September 1981

NOTICE

Availability of Reference Materials Cited in NRC Publications

Most documents cited in NRC publications will be available from one of the following sources:

1. The NRC Public Document Room, 1717 H Street., N.W.
   Washington, DC 20555
2. The NRC/GPO Sales Program, U.S. Nuclear Regulatory Commission,
   Washington, DC 20555
3. The National Technical Information Service, Springfield, VA 22161

Although the listing that follows represents the majority of documents cited in NRC publications, it is not intended to be exhaustive.

Referenced documents available for inspection and copying for a fee from the NRC Public Document Room include NRC correspondence and internal NRC memoranda; NRC Office of Inspection and Enforcement bulletins, circulars, information notices, inspection and investigation notices; Licensee Event Reports; vendor reports and correspondence; Commission papers; and applicant and licensee documents and correspondence.

The following documents in the NUREG series are available for purchase from the NRC/GPO Sales Program: formal NRC staff and contractor reports, NRC-sponsored conference proceedings, and NRC booklets and brochures. Also available are Regulatory Guides, NRC regulations in the *Code of Federal Regulations*, and *Nuclear Regulatory Commission Issuances*.

Documents available from the National Technical Information Service include NUREG series reports and technical reports prepared by other federal agencies and reports prepared by the Atomic Energy Commission, forerunner agency to the Nuclear Regulatory Commission.

Documents available from public and special technical libraries include all open literature items, such as books, journal and periodical articles, transactions, and codes and standards. *Federal Register* notices, federal and state legislation, and congressional reports can usually be obtained from these libraries.

Documents such as theses, dissertations, foreign reports and translations, and non-NRC conference proceedings are available for purchase from the organization sponsoring the publication cited.

Single copies of NRC draft reports are available free upon written request to the Division of Technical Information and Document Control, U.S. Nuclear Regulatory Commission, Washington, DC 20555.

NUREG-0782
Vol. 2

Draft Environmental Impact Statement

on 10 CFR Part 61 "Licensing Requirements for Land Disposal of Radioactive Waste"

Main Report

U.S. Nuclear Regulatory Commission

Office of Nuclear Material Safety and Safeguards

September 1981

VOLUME II

Table of Contents

	Page
Chapter 1 Introduction	
1.1 PURPOSE, SCOPE, AND STRUCTURE OF STATEMENT	1-1
1.1.1 Purpose	1-1
1.1.2 Scope	1-2
1.1.3 Structure of the EIS	1-2
1.2 NEED FOR AND DESCRIPTION OF THE PROPOSED ACTION	1-5
1.2.1 Background to Commercial LLW Disposal	1-5
1.2.2 Brief History of LLW Disposal	1-6
1.2.3 Federal and State Responsibilities in Commercial LLW Disposal	1-8
1.2.4 Need for Action	1-9
1.2.5 Description of the Proposed Action	1-12
1.3 SCOPING FOR THIS EIS	1-12
1.4 ISSUES ADDRESSED IN THIS EIS	1-15
REFERENCES	1-17
Chapter 2 Development of Regulations for LLW Disposal	
2.1 INTRODUCTION AND SUMMARY	2-1
2.2 PERFORMANCE OBJECTIVES VS PRESCRIPTIVE REQUIREMENTS	2-1
2.2.1 Performance Objective	2-2
2.2.2 Prescriptive Requirements	2-2
2.2.3 Performance Objective and Prescriptive Requirements	2-3
2.2.4 Comparative Analysis	2-3
2.3 ALTERNATIVE DISPOSAL METHODS	2-4
2.4 RADIOACTIVE WASTE DISPOSAL CLASSIFICATION	2-5
2.4.1 Alternative Classification Systems Examined	2-6
2.4.2 Preferred System Selected	2-7
2.4.3 Other Issues Regarding Classification	2-8
2.4.3.1 Classification by Total Hazard	2-8
2.4.3.2 De Minimis	2-8
REFERENCES	2-10

Table of Contents (Continued)

Chapter 3	Description of Affected Environment and Approach Followed in Preparing This EIS	Page
3.1	INTRODUCTION	3-1
3.2	APPROACH TO PREPARATION OF THIS EIS	3-2
3.2.1	Need for Performance Objectives	3-3
3.2.2	Development of Performance Objectives, Technical and Other Requirements	3-4
3.2.3	Codification of Requirements into a New Part 61 Rule	3-6
3.2.4	Unmitigated Impacts of Implementing Part 61	3-6
3.3	DEVELOPMENT OF DATA BASES FOR THE ANALYSES	3-7
3.4	WASTE GENERATION	3-8
3.4.1	Waste Generators	3-8
3.4.2	Description of the Waste as Generated	3-8
3.4.2.1	Fuel Cycle Facilities	3-8
3.4.2.2	Nonfuel Cycle Facilities	3-9
3.4.3	Characterization of LLW for Purposes of Analysis	3-10
3.4.3.1	Waste Stream Characterization	3-10
3.4.3.2	Volume of the Waste as Generated	3-13
3.4.3.3	Processing, Treatment and Packaging	3-13
3.4.3.4	Waste Spectra	3-19
3.4.3.5	Impact Measures	3-20
3.5	WASTE TRANSPORTATION AND PACKAGING	3-20
3.5.1	Description of Services Provided	3-22
3.5.2	Degree of Care Required in Handling the Waste and the Shielding Required During Transportation	3-23
3.5.3	Type of Packaging Used	3-23
3.5.4	Mode of Shipment	3-24
3.5.5	Impact Measures	3-24
3.6	WASTE DISPOSAL	3-25
3.6.1	Characterization of a Reference Base Case LLW Disposal Facility for Purposes of EIS Analysis	3-25
3.6.2	Facility Design	3-26
3.6.3	Facility Operations	3-31
3.6.3.1	Waste Receipt and Inspection	3-31
3.6.3.2	Waste Storage	3-33
3.6.3.3	Waste Disposal	3-33

Table of Contents (Continued)

Chapter 3 (Continued) Page

3.6.3.4 Site Groundskeeping and Maintenance..... 3-34
3.6.3.5 Site Safety, Radiation and Contamination Control. 3-34
3.6.3.6 Security..... 3-35
3.6.3.7 Recordkeeping and Reporting..... 3-35
3.6.3.8 Quality Assurance..... 3-36

3.6.4 Facility Closure and Long-Term Site Control..... 3-36
3.6.5 Reference Disposal Facility Costs..... 3-37

3.7 ALTERNATIVE WASTE DISPOSAL OPTIONS..... 3-40

3.7.1 Grouping of Alternatives..... 3-40
3.7.2 Impact Measures..... 3-42

3.8 IMPACT MEASURES USED AND METHOD OF CALCULATIONS..... 3-42

3.8.1 Impact Measures Used..... 3-43
3.8.2 Method of Calculation..... 3-46
3.8.3 Waste Generation/Processing..... 3-46
3.8.4 Waste Transportation..... 3-47
3.8.5 Waste Disposal..... 3-48

Chapter 4 Presentation and Analyses of Alternatives-Intruder

4.1 INTRODUCTION..... 4-1
4.2 BACKGROUND INFORMATION ON HUMAN INTRUSION..... 4-2

4.2.1 Human Intrusion Exposure Pathways..... 4-2
4.2.2 Intrusion Pathways Considered in the EIS..... 4-6

4.2.2.1 Intruder-Construction Scenario..... 4-7
4.2.2.2 Intruder-Agriculture Scenario..... 4-7
4.2.2.3 Population Exposures from Intrusion Activities... 4-7

4.3 DESCRIPTION AND IMPACTS OF BASE CASE (NO ACTION) AND OTHER ALTERNATIVES..... 4-8

4.3.1 Description of Base Case (No Action) Alternative..... 4-8
4.3.2 Costs and Impacts of Base Case (No Action) Alternative.... 4-8

4.3.2.1 Waste Spectra Nos. 2-4..... 4-13

4.3.3 Description of Alternatives..... 4-13

4.3.3.1 Controlling the Disposal of Specific Waste Streams..... 4-14

Table of Contents (Continued)

Chapter 4 (Continued) Page

4.3.4 Waste Form and Packaging..... 4-25

4.3.4.1 Effectiveness of Waste Form..... 4-25
4.3.4.2 Analysis of Impacts..... 4-30
4.3.4.3 Reduction in the Likelihood of Inadvertent Intrusion..... 4-34
4.3.4.4 Effectiveness of Stable Waste Form..... 4-39

4.3.5 Engineered and Natural "Intruder" Barriers Created Through Facility Design and Operations..... 4-40

4.3.5.1 Engineered Barriers..... 4-42
4.3.5.2 Depth of Disposal..... 4-44
4.3.5.3 Other Methods of Disposal..... 4-47

4.3.6 Institutional Controls..... 4-47

4.3.6.1 Background..... 4-47
4.3.6.2 Limitations to Institutional Controls..... 4-50

4.4 CONCLUSIONS AND COMPARATIVE EVALUATION OF ALTERNATIVES..... 4-52
4.5 DEVELOPMENT OF INTRUDER PERFORMANCE OBJECTIVE..... 4-54

4.5.1 Analysis of Intruder Dose Limitation Guidelines..... 4-54
4.5.2 Analysis of Alternatives..... 4-56
4.5.3 Results of Analysis..... 4-60
4.5.4 Selection of Preferred Alternative..... 4-65

4.6 DEVELOPMENT OF TECHNICAL CRITERIA..... 4-67

4.6.1 Institutional Control Requirements..... 4-67
4.6.2 Site Characteristics..... 4-69
4.6.3 Design and Operations..... 4-70
4.6.4 Waste Form and Packaging..... 4-71

REFERENCES..... 4-72

Chapter 5 Long-Term Environmental Protection--Presentation and Analysis of Alternatives

5.1 INTRODUCTION..... 5-1
5.2 GROUND-WATER MIGRATION..... 5-1

Table of Contents (Continued)

Chapter 5 (Continued) Page

5.2.1 Description of Base Case No Action Alternative..... 5-6
5.2.2 Costs and Impacts of Base Case No Action Alternative..... 5-8

5.2.2.1 Other Impacts..... 5-14

5.2.3 Need for Action..... 5-17
5.2.4 Alternatives to the Base Case..... 5-20

5.2.4.1 Case 1A- Use of Sand Backfill..... 5-21
5.2.4.2 Case 4 - Operationally Improved Case..... 5-23
5.2.4.3 Case 5 - Concrete Walled Trenches..... 5-34
5.2.4.4 Case 6 - Noncontainerized Disposal of Compressible Waste..... 5-39
5.2.4.5 Case 7 - Use of Improved Waste Forms..... 5-40
5.2.4.6 Case 8 - Use of Further Improved Waste Forms..... 5-49
5.2.4.7 Case 9 - Walled Trenches and Further Improved Waste Forms..... 5-54
5.2.4.8 Case 10 - High Integrity Containers..... 5-54

5.2.5 Intruder Impacts Associated With the Case Study..... 5-61
5.2.6 Summary of Observations and Conclusions Regarding the Case Study..... 5-61

5.3 DEVELOPMENT OF A PERFORMANCE OBJECTIVE FOR MIGRATION AND LONG-TERM STABILITY..... 5-74

5.4 OTHER POTENTIAL LONG-TERM ENVIRONMENTAL IMPACT PATHWAYS..... 5-82

5.4.1 Gaseous Releases from Decomposing Wastes..... 5-82
5.4.2 Plant and Animal Intrusion..... 5-84
5.4.3 Erosion..... 5-85
5.4.4 Summary..... 5-87

5.5 DEVELOPMENT OF TECHNICAL CRITERIA..... 5-89

5.5.1 Codification of Existing Practice..... 5-91

5.5.1.1 Institutional Control Requirements..... 5-91
5.5.1.2 Site Characteristics..... 5-92
5.5.1.3 Design and Operations..... 5-94
5.5.1.4 Waste Form and Packaging..... 5-98

5.5.2 Codification of New Requirements..... 5-100

5.5.2.1 Institutional Control Requirements..... 5-100
5.5.2.2 Site Characteristics..... 5-105
5.5.2.3 Design and Operations..... 5-105

Table of Contents (Continued)

Chapter 5 (Continued) Page

5.5.2.3.1 Contact of Waste by Water..... 5-105
5.5.2.3.2 Stability of Disposal Cells..... 5-110

5.5.2.4 Waste Form and Packaging..... 5-115

REFERENCES..... 5-119

Chapter 6 Operational Safety

6.1 INTRODUCTION..... 6-1
6.2 POTENTIAL PUBLIC IMPACT DURING OPERATIONS AT THE DISPOSAL FACILITY..... 6-1

6.2.1 Potential Public Impact From Small Spills During Normal Operations..... 6-1
6.2.2 Potential Public Impacts From Operational Accidents..... 6-6

6.2.2.1 Analysis of Accidental Fire..... 6-7
6.2.2.2 Analysis of Dropped Container..... 6-10
6.2.2.3 Summary..... 6-13

6.3 OCCUPATIONAL EXPOSURES..... 6-13
6.4 PERFORMANCE OBJECTIVE..... 6-13
6.5 DEVELOPMENT OF TECHNICAL CRITERIA..... 6-14

6.5.1 Licensing Review of Applicants Operational Health and Safety Program..... 6-14
6.5.2 Minimum Waste Form and Packaging Requirements..... 6-15

6.6 EFFLUENTS DUE TO WASTE PROCESSING AT A REGIONAL PROCESSING CENTER (ASSUMED TO BE LOCATED AT THE DISPOSAL FACILITY)..... 6-17

REFERENCES..... 6-20

Chapter 7 Waste Classification

7.1 INTRODUCTION..... 7-1

7.1.1 Alternatives Considered..... 7-2
7.1.2 Development of Waste Classes..... 7-3

7.2 WASTE CLASSIFICATION BASED UPON CONSIDERATION OF A POTENTIAL INADVERTENT INTRUDER..... 7-6

Table of Contents (Continued)

Chapter 7 (Continued) Page

7.2.1 Classes of Waste..... 7-6
7.2.2 Corrections for Waste Form..... 7-8
7.2.3 Disposal Facility Design Considerations..... 7-9
7.2.4 Effect of Environmental Conditions on Intruder Exposures.. 7-10
7.2.5 Operational Limits--Maximum Average and Allowable Concentrations..... 7-11
7.2.6 Transuranic Isotopes..... 7-13

7.3 CONSIDERATION OF GROUND-WATER IMPACTS..... 7-16
7.4 FINAL CLASSIFICATION..... 7-17

7.4.1 Limits for Ground-Water Migration..... 7-21
7.4.2 Isotopes Not on List..... 7-21

7.5 IMPLEMENTATION OF WASTE CLASSIFICATION REQUIREMENT..... 7-22

REFERENCES..... 7-29

Chapter 8 Regulatory Program--Presentation and Analysis of Alternatives

8.1 INTRODUCTION AND SUMMARY..... 8-1
8.2 LICENSING PROCEDURES..... 8-1

8.2.1 Existing Procedures..... 8-2

8.2.1.1 Licensing Steps..... 8-2
8.2.1.2 Contents of Applications..... 8-3

8.2.2 Changes and Alternatives to Existing Procedures..... 8-3

8.2.2.1 Scope of Procedures..... 8-3
8.2.2.2 Licensing Steps..... 8-3

8.2.2.2.1 Tendering..... 8-3
8.2.2.2.2 Docketing..... 8-4
8.2.2.2.3 NEPA..... 8-4
8.2.2.2.4 Construction Authorization..... 8-4
8.2.2.2.5 Hearings..... 8-5
8.2.2.2.6 Issuing Licenses..... 8-5
8.2.2.2.7 Renewals..... 8-5
8.2.2.2.8 Closure..... 8-6
8.2.2.2.9 Postclosure..... 8-6
8.2.2.2.10 Summary..... 8-8

Table of Contents (Continued)

Chapter 8 (Continued) Page

8.2.2.3 Contents of Applications and Findings 8-8

8.2.2.3.1 Contents of Applications..... 8-8
8.2.2.3.2 Findings..... 8-10
8.2.2.3.3 Conditions of Licenses..... 8-11
8.2.2.3.4 License Amendments and Renewals..... 8-12
8.2.2.3.5 Application for Closure..... 8-12
8.2.2.3.6 Transfer of License..... 8-12
8.2.2.3.7 Termination of License..... 8-13

8.2.2.4 Miscellaneous Procedural Requirements..... 8-13

8.2.2.4.1 Tests at Disposal Facilities..... 8-13
8.2.2.4.2 Commission Inspection of Disposal Facilities..... 8-13
8.2.2.4.3 Violations..... 8-13

8.3 RECORDKEEPING, REPORTS, MANIFESTS..... 8-13

8.3.1 Existing Requirements..... 8-13
8.3.2 Need for Manifest..... 8-14
8.3.3 Manifest..... 8-15

8.3.3.1 General Considerations..... 8-15
8.3.3.2 Contents and Format..... 8-15
8.3.3.3 Use..... 8-17

8.3.3.3.1 Generator..... 8-17
8.3.3.3.2 Broker..... 8-18
8.3.3.3.3 Processor..... 8-18
8.3.3.3.4 Disposal Facility Operator..... 8-19
8.3.3.3.5 Crosschecking..... 8-20
8.3.3.3.6 Timing..... 8-20

8.3.4 Transfers..... 8-21
8.3.5 Part 61 Recordkeeping and Reporting Requirements..... 8-22

8.3.5.1 Recordkeeping..... 8-22
8.3.5.2 Reports..... 8-22

8.4 STATE, TRIBAL, AND PUBLIC PARTICIPATION..... 8-23

8.4.1 Existing Provisions..... 8-23

8.4.1.1 Docketing..... 8-23
8.4.1.2 Hearings..... 8-23

Table of Contents (Continued)

Chapter 8 (Continued) Page

8.4.1.3 Docket Files..... 8-24
8.4.1.4 Land Ownership..... 8-24
8.4.1.5 Low-Level Radioactive Waste Policy Act..... 8-24
8.4.1.6 NEPA..... 8-24

8.4.2 Changes and Alternatives to Existing Procedures..... 8-25

8.4.2.1 General..... 8-25
8.4.2.2 Docketing..... 8-25
8.4.2.3 Hearings..... 8-26
8.4.2.4 Docket Files..... 8-26
8.4.2.5 Landownership..... 8-26
8.4.2.6 NEPA..... 8-27
8.4.2.7 Participation by State or Tribal Governments..... 8-27

REFERENCES..... 8-29

Chapter 9 Financial Assurances for Closure, Postclosure, and Institutional Care

9.1 INTRODUCTION..... 9-1
9.2 NEED FOR FINANCIAL PROTECTION REGULATIONS..... 9-1

9.2.1 Federal and State Precedents for Closure, Postclosure, and Long-Term Care Requirements..... 9-4

9.2.1.1 Federal Financial Assurance Mechanisms..... 9-4

9.2.1.1.1 Environmental Protection Agency (EPA). 9-4
9.2.1.1.2 U.S. Department of the Interior, Office of Surface Mining..... 9-4
9.2.1.1.3 Federal Maritime Commission (FMC).... 9-4

9.2.1.2 State Financial Assurance Mechanisms..... 9-5

9.2.1.2.1 Illinois..... 9-5
9.2.1.2.2 Nevada..... 9-5
9.2.1.2.3 South Carolina..... 9-5
9.2.1.2.4 Kentucky..... 9-6
9.2.1.2.5 Washington..... 9-6
9.2.1.2.6 New York..... 9-6
9.2.1.2.7 Oregon..... 9-6
9.2.1.2.8 Wisconsin..... 9-7
9.2.1.2.9 Kansas..... 9-7
9.2.1.2.10 Maryland..... 9-7

Table of Contents (Continued)

Chapter 9 (Continued) Page

9.3 FINANCIAL ASSURANCES FOR CLOSURE AND POSTCLOSURE OF A LOW-LEVEL WASTE SITE..... 9-7

9.3.1 Introduction..... 9-7
9.3.2 Technical Requirements for Financial Assurances for Closure and Postclosure 9-8
9.3.3 Alternative Financial Assurance Mechanisms for Closure Considered by the Staff..... 9-10

9.3.3.1 Surety Bonds..... 9-11
9.3.3.2 Cash Deposits into a Government Account..... 9-12
9.3.3.3 Escrow Accounts..... 9-12
9.3.3.4 Trust Funds..... 9-13
9.3.3.5 Certificates of Deposit..... 9-14
9.3.3.6 Deposits of Securities..... 9-14
9.3.3.7 Pledges of Securities and Liens Against Property of the Operator (Secured Assets)..... 9-14
9.3.3.8 Letters of Credit..... 9-15
9.3.3.9 Self-Insurance by the Operator..... 9-16
9.3.3.10 Financial Tests..... 9-16
9.3.3.11 No Financial Assurance Requirements for Closure and Postclosure..... 9-17
9.3.3.12 Other Short-Term Sureties..... 9-17

9.3.3.12.1 Imposing a Surcharge on Waste Generators and Depositing Funds Into a Sinking Fund..... 9-17
9.3.3.12.2 Closure Pool..... 9-18

9.3.4 Conclusions and Financial Assurance Mechanisms for Closure and Postclosure Found Acceptable by the Staff..... 9-18

9.4 LONG-TERM CARE (ACTIVE INSTITUTIONAL CONTROL PERIOD) FUNDING REQUIREMENTS..... 9-20

9.4.1 Introduction..... 9-20
9.4.2 Need for Requiring Financial Assurances for the Active Institutional Control Period..... 9-20
9.4.3 Technical Requirements for Financial Assurances for Active Institutional Control..... 9-21
9.4.4 Types of Active Institutional Control Costs..... 9-21
9.4.5 Types of Active Institutional Control Funding Arrangements..... 9-21
9.4.6 Sinking Fund with Surcharge Recovered from Waste Generators..... 9-22
9.4.7 Low-Level Waste Disposal Site "Superfund"..... 9-22
9.4.8 Lease or Binding Arrangement..... 9-23

Table of Contents (Continued)

Chapter 10 (Continued) Page

9.4.9 No Financial Assurance Requirements for Active Institutional Control..... 9-23
9.4.10 Acceptable Financial Assurance Mechanisms for Active Institutional Control..... 9-23

Chapter 10 Environmental Consequences

10.1 INTRODUCTION..... 10-1
10.2 ENVIRONMENTAL CONSEQUENCES OCCURRING DIRECTLY AS A RESULT OF THE PROPOSED PART 61 RULE..... 10-2

10.2.1 Impacts on Federal Agencies..... 10-2

10.2.1.1 Impacts on NRC..... 10-2
10.2.1.2 Impacts on EPA..... 10-2
10.2.1.3 Impact on DOE..... 10-3
10.2.1.4 Impacts on DOT..... 10-3

10.2.2 Impacts on the States..... 10-3
10.2.3 Impacts on the Public..... 10-4

10.2.3.1 Beneficial Impacts..... 10-4
10.2.3.2 Adverse Impacts..... 10-5

10.3 ENVIRONMENTAL CONSEQUENCES OCCURRING INDIRECTLY AS A RESULT OF THE PROPOSED PART 61 RULE..... 10-5

10.3.1 Hypothetical Regional Sites..... 10-6

10.3.1.1 Northeast Site..... 10-6
10.3.1.2 Southeast Site..... 10-11
10.3.1.3 Midwest Site..... 10-11
10.3.1.4 Southwest Site..... 10-13

10.3.2 Assumed Regional Disposal Facility Designs and Waste Source Term..... 10-16
10.3.3 Results of the Regional Analysis..... 10-20

10.3.3.1 Long-Term Radiological Impacts..... 10-20
10.3.3.2 Short-Term Radiological Impacts..... 10-25
10.3.3.3 Costs..... 10-27
10.3.3.4 Other Impacts..... 10-30

List of Tables

Table		Page
1.1	Commercial Waste Disposal Sites	1-7
3.1	Waste Streams Considered in Analyses	3-11
3.2	Radionuclides Considered in Analyses	3-12
3.3	As Generated (Untreated) Isotopic Concentrations (Ci/m^3)	3-14
3.4	As Generated (Untreated) Waste Volumes Projected to be Generated-1980 to the Year 2000 (m^3)	3-18
3.5	Summary Description of Waste Spectra	3-21
3.6	Total Reference Site Costs	3-38
3.7	Summary of Processing Unit Impact Rates	3-47
3.8	Unit Rates for Impact Measures	3-50
4.1	Comparison of Intruder Exposure Scenarios	4-4
4.2	Summary of Potential Inadvertent Intruder Hazard to Seven Organs for 36 Waste Streams (Waste Spectrum 1)	4-9
4.3	Costs and Other Impacts of Base Case (No Action) Alternative	4-10
4.4	Potential Intruder Exposures to Whole Body and Bone for BWR Ion-Exchange Resins	4-15
4.5	Potential Intruder Exposures to Thyroid for BWR Ion-Exchange Resins	4-17
4.6	Summary of Potential for Intruder Exposures to Whole Body and Bone for BWR Combustible Trash	4-18
4.7	Summary of Potential Intruder Exposures to Whole Body and Bone for Four Groups of Waste Streams Under Waste Spectrum 2	4-19
4.8	Summary of Potential Intruder Hazard to Whole Body and Bone for Postulated Future LWR Decontamination Resin Stream	4-21
4.9	Summary of Potential Inadvertent Intruder Hazard for Whole Body and Bone for Postulated Sources Stream	4-22
4.10	Summary of Potential Inadvertent Intruder Exposures to Seven Organs for LWR Nonfuel Reactor Core Components	4-23
4.11	Summary of Potential Intruder Exposures to Whole Body and Bone From 34 Waste Streams	4-26
4.12	Summary of Potential Intruder Exposures to Whole Body and Bone for Four Waste Groups of 34 Waste Streams Under Waste Spectrum 2	4-27

List of Tables (Continued)

Table		Page
4.13	Summary of Potential Intruder Exposure to Whole Body and Bone From 36 Waste Streams (Credit Case)	4-31
4.14	Summary of Potential Intruder Exposures to Whole Body and Bone from 36 Waste Streams (No-Credit Case)	4-32
4.15	Potential Intruder Exposures to Whole Body and Bone for BWR Ion-Exchange Resins (Credit Case)	4-35
4.16	Potential Intruder Exposures to Thyroid for BWR Ion-Exchange Resins (Credit Case)	4-36
4.17	Potential Hazard to Whole Body and Bone for Two Groups Without Segregation for Waste Spectrum 2	4-38
4.18	Potential Hazard to Whole Body and Bone for High Activity Group with Segregation (Waste Spectrum 2)	4-39
4.19	Summary of Incremental Barrier Costs for Facility Design and Operation	4-41
4.20	Comparison of Cases to Determine Intrusion Performance Objective	4-58
4.21	Comparison of Cases Incorporating a Hot Waste Facility	4-66
5.1	Base Cases Considered	5-7
5.2	Comparison of Assumed Environmental Characteristics for Cases 1, 2, and 3	5-9
5.3	Base Radiological Impacts for Cases 1-3	5-10
5.4	Summary of Case 1 Calculated Exposures to Whole Body and Thyroid as a Function of Time	5-11
5.5	Other Impacts Associated with Cases 1-3	5-12
5.6	Maximum Ground-Water Impacts Associated with Case 1A	5-22
5.7	Comparison of Other Impacts Associated with Case 1A	5-24
5.8	Five Subcases of Case 4	5-25
5.9	Estimated Maximum Radiological Ground-Water Impacts for Cases 4A Through 4E	5-27
5.10	Other Impacts Associated With Cases 4A Through 4E	5-31
5.11	Summary of Cases 5 and 6	5-35
5.12	Estimated Radiological Ground-Water Impacts for Cases 5 and 6	5-36
5.13	Other Impacts Associated with Cases 5 and 6	5-37

List of Tables (Continued)

Table		Page
5.14	Summary of Cases 7A-7D	5-42
5.15	Estimated Radiological Impacts from Ground-Water Migration for Cases 7A through 7D	5-43
5.16	Other Impacts for Cases 7A Through 7D	5-45
5.17	Summary of Cases 8 and 9	5-50
5.18	Summary of Ground-Water Impacts for Cases 8 and 9	5-51
5.19	Other Impacts Associated with Cases 8 and 9	5-52
5.20	State of South Carolina Criteria for High Integrity Containers	5-56
5.21	Estimated Radiological Impacts from Ground-Water Migration for High Integrity Container Cases 10A-10C	5-58
5.22	Other Impacts Associated with High Integrity Container Cases 10A-10C	5-60
5.23	Waste Volume Averaged Individual and Population Intruder Impacts for the Ground-Water Migration Case Study	5-62
5.24	Summary of Costs and Impacts for Cases 1 Through 10C	5-65
5.25	Summary Radiological Impacts for Cases 1 and 7D Without Liquid Scintillation Vial Waste and Biowaste	5-73
5.26	Population Airborne Impacts from Potential Erosion of the Reference Facility	5-88
5.27	Individual Waterborne Impacts from Potential Erosion of the Reference Facility	5-89
5.28	Comparison of Costs for Alternative Observation Periods	5-104
5.29	Additional Facility Design and Operations Unit Costs For Improved Disposal Cell Covers	5-107
6.1	Soil Samples Collected at Boundaries of U.S. Ecology Disposal Facility Located in Center of Hanford Reservation	6-3
6.2	Soil Samples from Barnwell, South Carolina Disposal Facility	6-4
6.3	Stream-by-Stream Impacts to Whole Body and Bone from an Accidental Fire (mrem)	6-9
6.4	Stream-by-Stream Impacts to Whole Body and Lung from Dropped-Container Accident (mrem)	6-12

List of Tables (Continued)

Tables		Page
7.1	Calculated Waste Classification Limits Assuming Worst-Case Waste Form	7-7
7.2	Waste Classification Table	7-18
7.3	Waste Form and Packaging Requirements in Accordance with Waste Classification	7-20
7.4	Estimated Upper-Range Maximum Radionuclide Concentrations ($\mu Ci/cm^3$)	7-25
7.5	Calculated Scaling Factors for LWR Process Wastes	7-26
7.6	Process Waste Action Limits for BWRs	7-27
7.7	Process Waste Action Limits for PWRs	7-28
9.1	Life Cycle Financial Assurances for a Disposal Facility Following Proposed 10 CFR Part 61	9-2
10.1	Summary of Regional Disposal Facility Site Environmental Properties	10-7
10.2	Retardation Coefficients Assumed for Regional Disposal Facility Sites	10-8
10.3	Population Distributions for the Regional Disposal Facility Sites	10-8
10.4	Design Assumptions for Regional Disposal Facilities	10-18
10.5	Summary of Potential Intruder and Erosional Impacts for Regional Case Study	10-21
10.6	Summary of Potential Ground-Water Impacts for Regional Case Study	10-23
10.7	Summary of Short-Term Radiological Impacts for the Regional Case Study	10-26
10.8	Summary of Population Exposures, Occupational Exposures, and Costs for Regional Incineration	10-27
10.9	Summary of Costs for Regional Case Study	10-28

List of Figures

Figure		Page
3.1	Life Cycle at a Typical Near-Surface Disposal Facility.....	3-27
3.2	Conceptual Disposal Facility Layout.....	3-29
3.3	Conceptual Layout of Support Facilities.....	3-30
3.4	Details of Typical Disposal Trench.....	3-32
5.1	Geometry of Ground-Water Scenario.....	5-3
5.2	Geometric Relationships of Disposal Area and Ground-Water Access Locations.....	5-5
7.1	Tentative Waste Classification Matrix.....	7-5

List of Preparers

The overall responsibility for the preparation of this draft environmental impact statement was assigned to the Low-Level Waste Licensing Branch, Division of Waste Management, Office of Nuclear Material Safety and Safeguards, U.S. Nuclear Regulatory Commission. The statement was prepared with technical assistance from the firm of Dames and Moore, White Plains, New York.

Nuclear Regulatory Commission Staff

Preparers

R. Dale Smith, Chief
Low-Level Waste Licensing Branch

Paul H. Lohaus
Part 61 Task Leader

G. W. Roles
Part 61 EIS Project Manager

Kitty S. Dragonette
Mary Jo Seeman
Martin S. Weinstein

Contributors

Charles W. Bishop
Timothy C. Johnson
Robert D. MacDougall
Charles Nichols
George C. Pangburn
David L. Siefken
J. Wassler
Rex G. Wescott
Derek Widmayer

Special Contributors

Willste CRESS Central Dictation Unit

Etta Nicolet, Supervisor
Carolyn Holly
Pauline Rock
Alice Werner, Proofreader
Irene Suissa
Marguerite Wason

Robert Fonner, Attorney, Office of the Executive Legal Director
Patricia A. Smith, Contracts Specialist, Office of Administration
Jacqueline Newbury, Secretary, LLW Licensing Branch
Charlette W. Henry, Secretary, LLW Licensing Branch

Dames and Moore Staff

Others contributing significantly to this environmental impact statement included personnel of the firm of Dames and Moore, Inc. (D&M) of White Plains, New York. The D&M contribution was directed by Dr. Oktay I. Oztunali, who assumed this responsibility upon the untimely death of Alexander E. Aikens in the early stages of the project.

Principal D&M Contributors

Oktay I. Oztunali
Ralph E. Wild
Gary C. Ré
James J. Clancy
Kathryn E. Kelly

Other D&M Contributors

M. Salah Abdelhamid
Patricia Buchinsky
Dara F. Gray
Perry M. Moskowitz
Peter C. Newsom
C. Joseph Pitt
Estaban D. Picazo

Chapter 1

INTRODUCTION

1.1 PURPOSE, SCOPE, AND STRUCTURE OF STATEMENT

This environmental impact statement (EIS) addresses development of a new regulation, Part 61, to the U.S. Nuclear Regulatory Commission (NRC) rules in Title 10, Code of Federal Regulations to provide specific requirements for licensing the land disposal of low-level radioactive waste (LLW).

There are three principal purposes to the regulation being developed:

- Establish general requirements for the land disposal of radioactive waste;
- Establish the technical requirements for disposal of radioactive waste by near-surface disposal including limits on the form and content of waste to classify or to define which wastes are acceptable for near-surface disposal; and
- Establish the administrative and procedural requirements which NRC will follow in licensing the land disposal of radioactive waste.

In this EIS, performance objectives are analyzed and presented for land disposal. Specific technical requirements are analyzed and presented for near-surface disposal methods--i.e., disposal that generally takes place within the top 15-20 meters of the earth's surface involving specific techniques such as shallow land burial, deeper burial and engineered designs and modifications. Finally, administrative, procedural, and financial requirements for licensing specific land disposal facilities are also developed and presented.

1.1.1 Purpose

NRC has a two-fold purpose in preparing this EIS. First, it is to fulfill NRC's responsibilities under the National Environmental Policy Act of 1969 (NEPA) (Ref. 1). Section 102(2)(c) of NEPA requires that an EIS be prepared by federal agencies for "major Federal actions significantly affecting the quality of the human environment..." NRC has determined that the promulgation of a new regulation governing the disposal of LLW constitutes such an action and that an EIS should therefore be prepared.

NRC has also prepared this EIS to demonstrate the decision process and bases applied in the establishment of technical requirements and licensing procedures to be included in the Part 61 regulation. It is the intent of NEPA to have federal agencies incorporate environmental values into the decisionmaking process at an early stage to assure a thorough consideration of such values. As will be shown in later chapters of this document, NRC has considered and analyzed alternative courses of action and requirements were selected with full

consideration of environmental, health, and safety effects to current and future generations.

1.1.2 Scope

This EIS analyzes requirements for the land disposal of radioactive waste. As will be discussed in greater detail in Chapter 2, there is a large range in alternative disposal methods which can be applied in the disposal of LLW including deep space, ocean disposal, and a range of land-based methods. It is not possible to develop one regulation dealing with such a large variation in disposal technologies. Thus, Part 61 will apply and this EIS will analyze requirements for the land disposal of waste. Requirements for ocean disposal are a responsibility of the EPA. Space disposal, although technically feasible, is not developed to the point of routine technical and economic application.

This EIS is not a generic EIS in that it does not attempt to analyze all of the issues that are involved in the disposal of LLW. Rather, it is specific to providing a balanced decision analysis leading to the establishment of the technical requirements and procedures for licensing the disposal of LLW. Only issues that are germane to this decision process are analyzed and considered. Section 1.4 of this chapter summarizes these issues.

NRC had initially planned to develop and issue a regulation that would apply only to shallow land burial followed by amendments that would apply to other specific alternative land-based disposal methods. Based on initial work in scoping and preparing this EIS, NRC has expanded the scope of this initial rulemaking action to include determination of overall performance objectives expected in land disposal; specific technical requirements for the disposal of waste "near surface" by such means as shallow burial, engineered designs and modifications and deeper burial; and general requirements for disposal of waste by other methods (e.g., deep-mined cavity or other very deep disposal). The development of specific technical requirements for deep mined cavities or for other very deep disposal methods will be considered at a later time through a separate rulemaking. The specific aspects of LLW disposal that are examined and analyzed to determine the requirements for near-surface disposal include the form and content of waste; institutional control and surveillance of a disposal facility after closure; natural site characteristics; disposal facility design and operations; and financial assurance. Administrative and procedural requirements for licensing the land disposal of LLW are also examined. Finally, this EIS also examines and establishes a classification or definition of which wastes are acceptable for disposal by near-surface disposal methods (and which wastes are not and must be disposed of by other methods).

1.1.3 Structure of the EIS

This EIS has been prepared in accordance with requirements of the National Environmental Policy Act (NEPA) and following Council on Environmental Quality (CEQ) regulations (Ref. 2) for preparation of environmental impact statements and NRC implementing regulations set out in Title 10, Code of Federal Regulations, Part 51, "Licensing and Regulatory Policy and Procedures for Environmental Protection." Both existing NRC requirements and those set out in a

Notice of Proposed Rulemaking to amend 10 CFR Part 51 to implement new CEQ regulations (Ref. 3) have been consulted in the preparation of this statement.

The EIS is divided into ten formal chapters which are listed and summarily described in the following paragraphs.

Chapter 1 - "Introduction" discusses the purpose, scope, and structure of the EIS, describes the proposed action and the need for it, reviews the scoping process used to focus the EIS, and sets out the specific issues involving radioactive waste disposal that will be addressed in this statement.

Chapter 2 - "Development of Regulations for LLW Disposal" presents the strategy NRC has followed in developing regulations for LLW disposal and presents and resolves three issues: the type of requirements to be developed, alternative disposal methods, and approach to classification of LLW.

Chapter 3 - "Description of the Affected Environment and Approach Followed in Preparing this EIS" describes the environment experiencing direct and indirect impacts and describes how, for purposes of analysis in this EIS, NRC developed a base of data about the environment and developed impact measures that can be applied in deciding the performance objectives and technical requirements that should be applied in the disposal of LLW.

Chapter 4 - "Presentation and Analysis of Alternatives-Intruder" presents an analysis of LLW disposal to determine pathways of human exposure thru inadvertent intrusion, analyzes the "no action alternative" presenting typical costs and impacts to an inadvertent intruder from LLW disposal as it has typically been carried out; analyzes a range of alternatives that can be applied in the design, operation, institutional control, and form of waste to reduce the impacts to an inadvertent intruder; presents and analyzes a range of numerical performance objectives and technical requirements to assure an adequate level of safety in LLW disposal; and selects a preferred performance objective and technical requirements.

Chapter 5 - "Presentation and Analysis of Alternatives-Long-Term Environmental Protection" analyzes long-term environmental pathways of release; analyzes the "no action alternative" presenting typical costs and impacts from environmental releases; analyzes a range of alternatives that can be applied to mitigate the impacts; presents and analyzes alternatives performance objectives and technical requirements for long-term environmental protection; and selects a preferred performance objective and technical requirements.

Chapter 6 - "Operational Safety" analyzes safety during the operation of a near-surface disposal facility including potential releases from accidents and waste processing at a central waste processing facility colocated with the disposal facility and sets out requirements directed at assuring safety during operations.

Chapter 7 - "Classification of Waste for Near-Surface Disposal" collectively ties all of the preferred technical requirements together to present a classification of waste for near-surface disposal, i.e., defines several categories

of waste based on the type, form, and concentration of various nuclides in waste and the requirements that should be applied in the disposal of each category. It also identifies wastes which would generally not be acceptable for near-surface disposal.

Chapter 8 - "Regulatory Program for LLW Disposal" reviews existing administrative and procedural requirements followed and applied by the NRC in licensing LLW disposal facilities and presents changes to these requirements.

Chapter 9 - "Financial Assurances for Closure, Postclosure, and Institutional Control" reviews the need for financial assurance requirements; presents and analyzes alternatives considered; and selects preferred requirements to assure adequate funds will be available for closure, postclosure, and institutional control.

Chapter 10 - "Environmenal Consequences of Part 61" presents the typical and unmitigated impacts of the new Part 61 rule including analysis of the disposal of waste on a regional basis following the preferred technical requirements identified in this EIS.

A series of Appendices which are being published as a separate volume contain the details of the assumptions, analysis methodology, computer programs, and detailed listing of results. Following is a listing of the Appendices.

Appendix A - "Reserved for Staff Analysis--Comments on Draft EIS and Proposed Part 61 Rule"
Appendix B - "Reserved for Public Comments on Draft EIS and Proposed Part 61 Rule"
Appendix C - "Public Participation in the Development of the LLW Disposal Regulation"
Appendix D - "Low-Level Waste Sources and Processing Options"
Appendix E - "Description of a Reference Near-Surface Disposal Facility"
Appendix F - "Alternative Near-Surface Disposal Technologies"
Appendix G - "LLW Disposal Impacts Analysis Methodology"
Appendix H - "Alternatives Analysis Codes"
Appendix I - "NRC Branch Technical Position-Low-Level Waste Burial Ground Site Closure and Stabilization"
Appendix J - "Regional Case Studies"
Appendix K - "Financial Requirements for Closure, Postclosure and Active Institutional Control for a Disposal Facility"
Appendix L - "Reserved for Final EIS"
Appendix M - "Potential Long-Term Impact Other than Ground-Water Migration and Inadvertent Intrusion"
Appendix N - "Analysis of Existing Recommendations, Regulations, and Guides"
Appendix O - "Reserved for Final EIS"
Appendix P - "Reserved for Final EIS"
Appendix Q - "Calculation of Preoperational, Operational, Closure, and Active Institutional Control Costs"

1.2 NEED FOR AND DESCRIPTION OF THE PROPOSED ACTION

This section is designed to acquaint the reader with basic information on commercial waste disposal as it exists today and then, drawing upon this information, demonstrate the need for a comprehensive LLW regulation. The section also contains a brief description of the proposed action.

1.2.1 Background to Commercial LLW Disposal

The term "low-level waste" serves as a general term for a very wide range of radioactive waste. Any industry, hospital, medical, educational, or research institution, private or government laboratory, nuclear power plant, and other facilities forming part of the nuclear fuel cycle (e.g., a fuel fabrication plant) utilizing radioactive material as a part of their operational activities generates so-called low-level radioactive waste just as they generate other types of hazardous and nonhazardous waste. LLW consists of the radioactive materials themselves and materials which have been in contact with radioactive material and are contaminated or suspect of being contaminated.

Presently there are more than 20,000 companies, institutions, laboratories, and government facilities licensed by the NRC or Agreement States to use radioactive materials as a normal part of their day-to-day activities and most of these users generate some form of low-level radioactive waste which must be disposed of. Because of the wide range in the type of activities using these materials and the wide range in specific purposes of application, LLW is generated in a wide range of waste types, forms, and amounts. It ranges from suspect trash (e.g., laboratory wipes merely suspected of being contaminated) and hospital waste containing small quantities of short-lived radiopharmaceuticals to higher activity reactor filter sludges and sealed cobalt teletherapy sources. Currently about 85,000 m^3 (3 million ft^3) of commercial LLW is generated annually. Based on projections of LLW volume prepared by NRC for the 36 basic waste streams considered in this EIS, about 3.62 million m^3 (128 million ft^3) will be generated during the period 1980-2000. Of this, about 65% of the waste will be generated by fuel cycle sources and 35% by nonfuel cycle sources. Institutional generators will account for about 19% of the nonfuel cycle sources.

For most of the LLW that is generated in the U.S., the disposal process consists of three steps: processing and packaging; transport; and disposal. With regard to the first of these steps, most LLW, in its generated form, is placed in a U.S. Department of Transportation (DOT) shipping container and transported to a licensed commercial disposal facility for disposal. In other cases the waste may be further processed to reduce its volume or change its form (e.g., solidification of liquid wastes with cement) at which point it is placed inside a DOT-approved shipping container and shipped for disposal. (In some cases the type, form, and quantity of waste generated is such that the licensee can dispose of it directly under specific provisions of 10 CFR Part 20, e.g., discharge to the sanitary sewer system.)

In addition to those licensees who generate LLW, there are a number of licensed companies involved in the pickup, transport, and delivery of packaged LLW to

licensed disposal facilities for disposal. In some cases, these companies also provide additional services including supply of packaging, preparation of waste for shipment, and solidification of liquids. These companies generally pick up waste at customer facilities, consolidate individual waste packages into larger shipments, assume responsibility for the waste, and transport it to the disposal facility. A waste generator not using the services of such waste collectors will hire and consign the waste to a registered common or contract carrier for transport to the disposal facility. In this case the shipper retains responsibility for the waste.

Upon receipt of packaged LLW by a licensed commercial disposal site operator, it is disposed of by a method known as shallow land burial (SLB). This method of waste disposal consists of placing packaged waste into trenches that are about 150 m long by 30 m wide by 8 m deep. The trenches are backfilled with soil material excavated from the trench during construction, capped, and mounded to facilitate precipitation runoff.

1.2.2 Brief History of LLW Disposal

The disposal of commercial LLW by shallow land burial generally followed from the practices and procedures utilized by the Atomic Energy Commission (AEC) at national laboratories involved in atomic energy research and development and defense programs (Ref. 4). Activities in the programs involving use of radioactive materials generated quantities of radioactive waste and means had to be developed for their disposal.

Two principal methods of disposal were utilized: SLB and ocean disposal. The practice of SLB was quickly adopted as the preferred disposal practice. This technique could be utilized near the point where the waste was being generated, avoiding unnecessary transportation which might jeopardize the security of the project in the event of a transportation accident. In addition, SLB proved to be a fairly cost-effective technique as it employed practices commonly used in sanitary landfill operations and did not require unusual equipment or construction techniques.

With the growth of commercial applications, the AEC announced in 1960 that regional land burial sites for commercial LLW should be established on federal- or state-owned land and that the sites should be operated by private contractors subject to government licensing authority. With this announcement, the AEC indicated that its disposal sites would only be available for commercial use until adequate disposal capacity was established in the private sector. As an interim measure, pending designation of regional commercial waste sites, the AEC also announced that disposal sites at Idaho Falls, Idaho and Oak Ridge, Tennessee would continue to accept commercial wastes for disposal.

At the same time, the AEC also initiated a phase-out of sea disposal operations by placing a moratorium on the issuance of new sea disposal licenses. Existing licenses remained in effect and were phased out. The last disposal at sea took place in June 1970.

In February 1961, the AEC established a regulatory program for licensing the commercial operation of land burial sites on federal or state government-owned land. The regulations in existence at that time set out no specific technical criteria for site selection, design, operation, and closure although general considerations regarding site hydrology, geology, and other factors that should be addressed were identified. In September 1962, the AEC licensed the first commercial land burial site at Beatty, Nevada and, during the period 1962-1971, five additional commercial sites were licensed by the AEC or Agreement States resulting in a regional distribution of commercial disposal sites. These six sites were spread geographically throughout the United States and located near Richland, Washington (sited on the Hanford Reservation); Beatty, Nevada; Sheffield, Illinois; Maxey Flats, Kentucky; West Valley, New York; and Barnwell, South Carolina. In May 1962, the AEC withdrew its program of interim acceptance of commercial waste at Idaho Falls and Oak Ridge.

The DOE has operated 14 sites throughout the country for the disposal of wastes generated from defense programs and DOE research and development activities. A discussion of the characteristics and problems of the commercial and DOE sites has been extensively studied and is well-documented in the literature. Presently only three commercial sites remain open and two companies are involved in their operation: Chem-Nuclear Systems, Inc. (Barnwell, South Carolina) and U.S. Ecology, Inc. (Beatty, Nevada and Richland, Washington). Table 1.1 lists the six commercial sites, their respective operators, and current status.

Table 1.1 Commercial Waste Disposal Sites

Location	Operator	Originally Licensed By (year)	Currently Licensed By	Operational Status
Beatty, Nevada	U.S. Ecology, Inc.	AEC (1962)	State	Open
Maxey Flats, Kentucky	U.S. Ecology, Inc.	Kentucky (1962)	State	Closed
West Valley, New York	Nuclear Fuel Services, Inc.	New York (1963)	State	Closed
Richland, Washington	U.S. Ecology, Inc.	AEC (1965)	State and NRC*	Open
Sheffield, Illinois	U.S. Ecology, Inc.	AEC (1967)	NRC	Closed
Barnwell, S. Carolina	Chem-Nuclear Systems, Inc.	South Carolina (1971)	State and NRC*	Open

*NRC licenses only special nuclear material.

1.2.3 Federal and State Responsibilities in Commercial LLW Disposal

There are five key federal agencies that administer programs regarding the management and disposal of LLW. These include the Nuclear Regulatory Commission (NRC), the Environmental Protection Agency (EPA), the U.S. Geological Survey (USGS) in the Department of Interior, the Department of Energy (DOE), and the Department of Transportation (DOT).

The Nuclear Regulatory Commission (NRC) was established by the Energy Reorganization Act of 1974. This Act abolished the Atomic Energy Commission (AEC) and transferred all of its licensing and related regulatory functions assigned by the Atomic Energy Act of 1954 to NRC. Prior to 1974, the AEC had not only regulatory and licensing responsibilities, but also research and development functions with respect to atomic energy and related disciplines. The Energy Reorganization Act of 1974 split the AEC into two separate organizations: the NRC and the Energy Research and Development Administration (ERDA). The functions of ERDA have since been incorporated into the Department of Energy which carries out federal responsibilities for the research, development, and transfer of LLW disposal technology to commercial industry.

NRC has the responsibility in the United States of regulating and licensing the commercial and nondefense governmental use of source, byproduct, and special nuclear material. This responsibility extends to licensing commercial disposal of LLW in licensed facilities. NRC carries out its responsibilities in compliance with overall federal radiation protection guidance and environmental standards established by the Environmental Protection Agency. EPA was charged with this responsibility in the Reorganization Plan Number Three of 1970. The U.S. Geological Survey is responsible for basic research in the geological sciences and development of basic data for application in the development of criteria and to provide technical advice in the assessment of specific disposal sites. The U.S. Department of Transportation has the primary responsibility for regulating waste containers, transport vehicles, and other aspects of the interstate transport of radioactive waste.

Existing NRC regulations for commercial LLW disposal in licensed disposal facilities are principally contained in a few paragraphs in 10 CFR Part 20 (§20.302). The requirements mainly describe in general terms the type of information to be included in an application for a disposal facility and require that LLW disposal facilities must be sited on land owned by the state or federal government. In addition to disposal of waste at commercially operated shallow land burial facilities, provisions of 10 CFR Part 20 provide other means that licensees may use to dispose of waste directly. These include discharge to the sanitary sewer system (§20.303), release to the air and water (§20.106), burial in the soil or other means of disposal upon specific license approval (§20.302), and treatment or disposal by incineration (§20.305). The NRC also recently adopted amendments to Part 20 (§20.306) that provide for routine disposal of carbon-14 and tritium in concentrations less than 0.05 μCi/gm (microcurie/gram) when contained in animal carcass and liquid scintillation cocktail waste.

Other NRC regulations, Part 30 ("Rules of General Applicability to Domestic Licensing of Byproduct Material"), Part 40 ("Domestic Licensing of Source Material"), and Part 70 ("Domestic Licensing of Special Nuclear Material")--apply to possession of licensed material by a disposal facility licensee. Part 2 ("Rules of Practice for Domestic Licensing Proceedings") contains general requirements for NRC licensing proceedings. Part 51 ("Licensing and Regulatory Policy and Procedures for Environmental Protection") contains requirements for compliance with the National Environmental Policy Act of 1969 (NEPA). Under the existing regulatory framework for LLW disposal licensing, regulatory requirements for a potential disposal facility licensee are not centralized, systematic, or readily identified.

In discharging its responsibilities, NRC is empowered by the Atomic Energy Act to relinquish part of its regulatory authority over source, byproduct, and special nuclear material to the states. Under Section 274 of the Act, before the NRC enters into such an agreement, the state must have a radiation control program that is compatible with NRC's, and the state's program must be judged adequate by NRC to protect the public health and safety. Currently, there are 26 such Agreement States. To the extent that a new regulation represents a change in NRC's radiation protection programs for source, byproduct, and special nuclear material, it is necessary that the Agreement States cooperate in the formulation of compatible regulations and revise their existing regulations as necessary. Current NRC regulations regarding NRC's relationship with the Agreement States are contained in 10 CFR Part 150.

Licensing of commercial LLW disposal facilities is part of the NRC's authority which may be assumed by an Agreement State. Of the six commercial disposal facilities which have operated in the United States, five of these facilities are located in Agreement States and are principally regulated by the Agreement States (See Table 1.1).

1.2.4 Need for Action

As mentioned earlier, the AEC established a regulatory program for licensing the commercial operation of land disposal sites in February 1961. No detailed technical requirements for site selection, design, operation, and closure were, however, established (Ref. 4). The following considerations were applied by the AEC and Agreement States in licensing the existing commercial disposal sites:

- A written commitment must be obtained from a government body or a responsible official that a state or federal agency would assume control over the burial site in the event of default or abandonment of the site by the commercial operator. The site must be located on land owned by the federal or state government.

- The geological or hydrological characteristics of the site must be such that waste material is contained in a manner that will not endanger public health or safety and that migration of radioactivity from the site is unlikely.

- The waste must be in solid form before burial. Liquid waste must be solidified or immobilized to minimize the potential for migration.

- The burial ground operator must establish and conduct an environmental monitoring program. To determine whether migration has occurred, operators must establish a baseline of radioactivity that exists in the environment before any waste was buried. The monitoring program must be continued to detect radioactivity increases beyond those original levels. Increases must be reported to the appropriate regulatory agency, which then analyzes the possible significance.

- The packages in which wastes are transported must comply with appropriate federal standards. Packaging is designed to provide protection during transportation and handling. Although packaging would provide a primary barrier, the packaging and form of the waste were not relied upon nor expected to provide any significant waste containment after burial. The geology of the site was solely to be relied upon for containment.

In the late 1960s and early 1970s difficulties were encountered at some of the commercial and AEC sites relating to management of precipitation collecting in completed disposal trenches and releases of small concentrations of radioactivity. At the commercial sites, the difficulties were principally evident at the Maxey Flats, Kentucky and West Valley, New York sites. The problems were predominately attributed to three factors: (1) the trench cap or covering over the trench was of a higher permeability than the surrounding soil which allowed precipitation to enter and collect in trenches; (2) disposal trenches were completed when they contained appreciable quantities of rainwater; and (3) the compressible, degradable, unstable nature of the waste being buried led to subsidence of the trench cap creating pathways for precipitation to readily enter the trenches. These factors led to the filling of trenches with water and to small releases of radioactivity through surface and ground-water pathways.

Studies and corrective actions were initiated at the sites. Trenches were pumped to remove the water, and trench leachates were treated through an evaporator at Maxey Flats and a liquid waste treatment system at West Valley. Measures were also taken to recap and stabilize trenches to reduce future water infiltration. Results of monitoring programs and studies at the sites showed that although releases of radioactivity had occurred, they were low and presented no hazard to the public health and safety (Refs. 5 and 6). The primary experience gained was that the compressible, degradable, unstable nature of the waste disposed of, coupled with site conditions, was leading to unstable site conditions requiring active maintenance for uncertain periods of time at high costs. Funds being collected for postoperational activities were also inadequate to cover the potential long-term costs involved (particularly the long-term maintenance costs involved) in caring for the sites over the long term. These sites are presently closed and may require continued active maintenance for many years to assure stability.

Similar problems were experienced at the Sheffield, Illinois site where compressible unstable wastes have created an unstable site condition where stabilization action and potential long-term maintenance is required. Funds collected by the state for this purpose have also proved insufficient to cover the estimated costs. This site is presently closed and is the subject of an ASLB hearing regarding conditions for final closure of the site.

Problems of a different nature have occurred at the Beatty, Nevada site. Over a period of several years, employees removed containers and certain waste materials (e.g., contaminated tools) for personal offsite use. These materials were removed from the site in violation of federal and state regulations and license conditions. Based on extensive surveys by both federal and state personnel, no public health and safety hazard was created by the illegal removal (Ref. 7). This incident pointed to the need for more attention to site security and controls in disposal facility operations.

More recent problems have involved a lack of attention to detail on the part of many waste generators relating to the form and content of waste shipped for disposal (Ref. 8). The shipment of leaking and damaged packages and improper waste forms resulted in the temporary shutdown of two of the three operating commercial sites. In addition, with the shutdown in three of the operating sites, an imbalance in the regional disposal facility capacity has resulted with most of the waste being generated in the east and most of the disposal capacity located in the west. Several actions have evolved in response to this. The South Carolina site is reducing the average monthly volume of waste it will accept to the average monthly volume received during 1977 (100,000 ft^3/month) (Ref. 9). A voter initiative was passed in the state of Washington to prohibit the receipt of out-of-state waste (except institutional waste) by July 1981 unless action is taken to form a regional state compact. This action was recently ruled unconstitutional and thus unenforceable by the U.S. District Court in Washington (Ref. 10). Congress also recently acted in this area by passing the "Low-Level Radioactive Waste Policy Act" (PL-96-573) which places the responsibility for assurance of adequate LLW disposal capacity on the states. The law stresses the regional solution to adequate LLW disposal capacity.

Also, in 1976, an NRC Task Force was created to review programs used by the NRC and state governments to regulate disposal of commercial low-level waste. A document entitled "NRC Task Force Report on Review of the Federal/State Program for Regulation of Commercial Low-Level Radioactive Waste Burial Grounds" (NUREG-0217) was published in March 1977 (Ref. 4). In the report the Task Force made a number of recommendations regarding federal and state regulation of LLW disposal and other related issues affecting commercial burial ground regulation and operation. These recommendations included development of a specific regulatory program for low-level waste disposal including development of more comprehensive regulations, standards, and criteria.

In addition, beginning in 1976, a series of reports were issued by the General Accounting Office, the Joint Committee on Atomic Energy, and the House Committee on Government Operations (Refs. 11, 12, 13, 14, and 15). The conclusions of these reports were wide ranging, but among the most basic was the conclusion that the existing sites had been selected and licensed on an inadequate geologic

and hydrologic data base and in the absence of well-documented criteria for identification of a suitable waste disposal site. As a result, a number of the existing sites were experiencing undesirable operational problems, i.e., cracking of trench covers, intrusion of precipitation and ground water, and subsequent releases of radioactivity to the environment. Moreover, in the absence of an improved data base on site characteristics and development of defensible standards and criteria for licensing, the reports noted that the selection of future waste disposal sites might well encounter the same types of problems.

In response to the Task Force and Congressional reports and identified need, the NRC staff subsequently developed a program plan for low-level waste management. Support for the development of such a program came not only from the Task Force and the aforementioned reports, but also from state and other federal agencies, industry, and public interest organizations. To formulate this program, the staff considered the Task Force recommendations; public comments on the Task Force Report; data gleaned from review of technical documents and participation in conferences and meetings, and discussions attended by industrial, state, and public organizations; and other correspondence and documents. A document describing the program entitled "NRC Low-Level Radioactive Waste Management Program" (NUREG-0240) was published in September 1977 (Ref. 16). This program is currently in progress and has resulted in technical studies to prepare a regulatory base; programs for development of regulations, regulatory guides, and licensing procedures; and this environmental impact statement.

1.2.5 Description of the Proposed Action

The proposed action being considered in this EIS is the issuance of a new regulation (Part 61) to the U.S. Nuclear Regulatory Commission (NRC) rules in Title 10, Code of Federal Regulations. Part 61 will provide licensing procedures, performance objectives, and technical requirements for the issuance of licenses for the land disposal of low-level radioactive waste. Specifically, the proposed action includes consideration of requirements on the standards of performance that should be met in LLW disposal; technical requirements for the siting, design, operation, closure and postoperational activities for a near-surface LLW disposal facility; technical requirements on waste form that waste generators would be required to meet for acceptance of waste at a disposal facility; classification of waste; administrative and procedural requirements for licensing a disposal facility; and provisions for adequate financial assurance.

1.3 SCOPING FOR THIS EIS

Scoping of an environmental impact statement is defined by the Council on Environmental Quality in 40 CFR Part 501.7 (Ref. 2) as "...an early and open process for determining the scope of issues to be addressed and for identifying the significant issues related to a proposed action." Although the concept of scoping is a relatively recent development for EISs, NRC has been conducting scoping activities relative to the proposed Part 61 and this EIS since 1978. The activities constituting this process are discussed in the following paragraphs and include:

1. Public Notice of Development of a Radioactive Waste Disposal Classification System (Ref. 17)

2. Advance Notice of Proposed Rulemaking on the LLW Disposal Regulation (10 CFR Part 61) (Ref. 18)

3. Public Review and Comment on a Preliminary Draft of 10 CFR Part 61 (Ref. 19)

4. Regional Workshops on 10 CFR Part 61 (Refs. 20, 21, 22 and 23)

In 1974, the Atomic Energy Commission (AEC) proposed to prohibit the disposal of commercially generated transuranic (TRU) radionuclides by shallow land burial. Upon review of the proposed rule and the comments received from interested parties, the NRC staff initiated development of regulations which would govern the classification of all radioactive wastes--not just TRU-contaminated waste.

The staff initiated a study to develop an approach for classification of waste to help provide input into the regulations development effort and environmental impact statement. Several documents have been published regarding this study. On August 18, 1978, NRC published a Federal Register notice of "Development of a Radioactive Waste Disposal Classification System" (43 FR 36722). In this notice, the Commission requested comments on a study report entitled "A System for Classifying Radioactive Waste Disposal--What Waste Goes Where?" (NUREG-0456) to guide the further development of a waste classification methodology and the completion of the study. Comments were specifically requested in the following areas: the overall approach; the migration pathways and exposure mechanisms; the exposure guidelines; and applications of the methodology.

A summary of the comments received by the Commission is contained in Appendix C including an analysis of the comments as they relate to the development of Part 61.

On October 25, 1978, NRC published in the Federal Register an Advance Notice of Proposed Rulemaking (43 FR 49811) regarding the development of specific regulations for the disposal of LLW; a new Part 61 to Title 10, Code of Federal Regulations. The Commission requested advice, recommendations, and comments on the scope and content of the regulations and an environmental impact statement (EIS) that would be prepared to guide and support development of the regulations. As a part of this Notice, NRC announced its intention to:

- Develop technical requirements for the disposal of LLW by shallow land burial and alternative disposal methods;

- Prepare a supporting EIS for the regulation; and

- Coordinate development of technical requirements for shallow land burial and alternative disposal methods with requirements for the classification of waste.

Formal comments received in response to the Advance Notice were placed in the Public Document Room of the NRC as an official part of the record for this Part 61 rulemaking proceeding (Docket No. PR61). Details of the comments received are contained in Appendix C, including an analysis of comments received on each specific question of the Advance Notice.

In general, the respondents to the Advance Notice strongly supported NRC's development of specific requirements for the disposal of low-level waste. There was also support among the commenters that an overall EIS should be prepared to provide an essential part of the information and decisional base for the development of the requirements for the rulemaking action.

In addition to the comments received by NRC on the Advance Notice, NRC staff also considered input from the following other sources in scoping the content of this EIS.

- The results of program studies and other technical data on LLW management and disposal;
- Licensing experience and current LLW management techniques at existing disposal sites;
- Input from the State Planning Council, National Governors Association, National Council of State Legislatures and National Conference of State Radiation Control Program Directors;
- Programs of the Environmental Protection Agency (EPA) to develop criteria and standards for management of LLW and regulations for disposal of nonradioactive solid and chemically hazardous wastes;
- Recommendations of the Interagency Review Group on Nuclear Waste Management;
- A Natural Resources Defense Council (NRDC) Petition for Rulemaking;
- Discussions with industry and public interest groups, state and federal agencies, and others.

To help focus development of the EIS and possible contents of such a new regulation, NRC staff also prepared and widely distributed for public review and comment a preliminary draft Part 61 regulation dated November 5, 1979. The preliminary draft received wide distribution and copies were sent to the states, other federal agencies, public interest groups, the industry, and others. On February 28, 1980, NRC staff also published in the Federal Register a Notice of Availability of the Preliminary Draft Regulation (Ref. 24) announcing availability of the draft for public review and comment to help ensure wide distribution and early public review, comment, and input.

Comments received by the staff in response to the Notice of Availability have also been docketed and placed in the Commission's Public Document Room. Overall, the comments generally agreed with the need for, and approach and

general content of, the preliminary draft regulation. A summary of the comments received by the Commission is contained in Appendix C, including an analysis of comments received on each section of the preliminary draft of Part 61. A detailed listing of comments on specific sections of the preliminary draft of Part 61, prepared by the staff has also been placed in the Public Document Room, PR 61 Docket File.

During the summer and fall of 1980, NRC also contracted for and held 4 regional workshops to provide an opportunity for open dialogue between the states, public interest groups, industry, and others on the issues that needed to be addressed through the Part 61 rulemaking process. One workshop was sponsored by the Southern States Energy Board for the southeast region, a second by the Western Interstate Energy Board for the west, a third by the Midwestern Regional Office of the Council of State Governments for the central and midwest, and a fourth by the New England Regional Commission for the northeast. A copy of the full transcript for each meeting and a summary report documenting the collective views of the participants has been entered into the docket for this rulemaking and may also be examined at the Commission's Public Document Room. At these workshops, a range of institutional, organizational, and technical issues were discussed. Institutional issues such as land ownership, post-operational care, institutional controls, and financing were addressed. Consideration was also given to organizational issues such as state participation in NRC licensing action, Federal-Agreement relations, assistance to non-Agreement States, and regional siting. Technical issues that were examined included: performance objectives; de minimis levels; waste classification; nonradiological hazards; scope of regulatory guides and regulation; criteria for waste form; solidification of liquid wastes; volume reduction; and site characterization. In general, the workshops recommended that NRC adopt formal rules that establish broad performance objectives and administrative procedures, and set forth more specific program criteria and details in regulatory guides. A summary of the workshop findings and analysis of the findings on each specific issue considered is contained in Appendix C.

1.4 ISSUES ADDRESSED IN THIS EIS

Based on the results of NRC's scoping activities and the operating experience of the existing sites, the following issues were identified as those that were germane to this rulemaking action and of most importance in preparing this EIS:

1. The specific form and content of the requirements to be established and method to be applied in their development.

2. The alternative disposal methods which should be addressed in the rulemaking action.

3. The need to protect the public health and safety and environment during the short-term operational phase and over the long term relating to potential long-term releases to the environment.

4. The need to protect the inadvertent intruder.

5. The classification or definition of LLW based on hazard potential.

6. The need for adequate financial assurances in the disposal of LLW.

7. The need for long-term stability and predictability in disposal sites.

8. The need to eliminate long-term maintenance of disposal sites.

9. The NRC licensing process for waste disposal sites and the participation of the states, public and indian tribes in NRC's licensing process.

10. Long-term government land ownership and institutional control of disposal sites.

REFERENCES

1. National Environmental Policy Act of 1969, as amended, Public Law 91-190 as amended by Public Law 94-83.

2. Council on Environmental Quality, 40 CFR Parts 1500-1508, National Environmental Policy Act-Regulations, Federal Register, (43 FR 55978-56007), November 29, 1978.

3. U.S. Nuclear Regulatory Commission, 10 CFR Part 51, Environmental Protection Regulations for Domestic Licensing and Related Regulatory Functions and Related Conforming Amendments, Federal Register, (43 FR.13739 - 13766), March 3, 1980.

4. U.S. Nuclear Regulatory Commission, NRC Task Force Report on Review of the Federal/State Program for Regulation of Commercial Low-Level Radioactive Waste Burial Grounds, NUREG-0217, March 1977.

5. Kentucky Department for Human Resources, Project Report of Six Month Study of Radiation Concentrations and Transport Mechanisms at the Maxey Flats Area of Fleming County, Kentucky, December 1974.

6. Matuszek, J. M., F. V. Strnisa, L. F. Baxter, Radionuclide Dynamics and Health Implications for the New York Nuclear Service Center's Radioactive Waste Burial Site, IAEA SM 207/59, March 1976.

7. U.S. Nuclear Regulatory Commission, Report to Congress on Abnormal Occurrences, NUREG-0090-3, January-March 1976.

8. U.S.Nuclear Regulatory Commission, Testimony on Low-Level Radioactive Waste Disposal Before the Subcommittee on Energy Research and Production, House Committee on Science and Technology, presented by Joseph Hendrie, Chairman, U.S. Nuclear Regulatory Commission, November 7, 1979.

9. South Carolina Department of Health and Environmental Control, Radioactive Material License No. 097, October 30, 1979.

10. U.S. District Court, Eastern District of Washington, Memorandum Decision for Case Number C-91-154 RJM and C-81-190 RJM by Robert J. McNichols, U.S. District Judge, June 26, 1981.

11. Comptroller General of the United States, Improvements Needed in the Land Disposal of Radioactive Waste - A Problem of Countries, January 12, 1976.

12. Comptroller General of the United States, Need For Greater Regulatory Oversight of Commercial Low-Level Radioactive, Waste, August 16, 1978.

13. Comptroller General of the United States, The Problem of Disposing of Nuclear Low Waste: Where Do We Go From Here, March 31, 1980.

14. Joint Committee on Atomic Energy, Radioactive Waste Management Hearing before the Subcommittee on Environment and Safety, May 10-12, 1976.

15. House Committee on Government Operations, Low-Level Nuclear Waste Disposal, House Report 94-1320, June 30, 1976.

16. U.S. Nuclear Regulatory Commission, The Nuclear Regulatory Commission Low Level Radioactive Waste Management Program, NUREG-0240, September 1977.

17. U.S. Nuclear Regulatory Commission, Development of a Radioactive Waste Disposal Classification System, Federal Register, (43 FR 36722-36725), August 18, 1978.

18. U.S. Nuclear Regulatory Commission, 10 CFR Part 61, Management and Disposal of Low-Level Wastes by Shallow Land Burial and Alternative Disposal Methods, Advance Notice of Proposed Rulemaking, Federal Register, 43 FR 49811-49812, October 25, 1978.

19. U.S. Nuclear Regulatory Commission, 10 CFR Part 61: Disposal of Low-Level Radioactive Waste and Low-Activity Bulk Solid Waste, Preliminary Draft, November 5, 1979.

20. Southern States Energy Board, Findings on NRC's Low-Level Rule Resulting from the Southern States Energy Board Workshop, May 15, 1980.

21. Western Interstate Energy Board, Report to the Nuclear Regulatory Commission, Workshop on Low-Level Waste Licensing Rule, July 25, 1980.

22. Midwestern Office, Council of State Governments, Report to the Nuclear Regulatory Commission, Workshop on Low-Level Waste Licensing Rule, August 28, 1980.

23. New England Regional Commission, Report to the U.S. Nuclear Regulatory Commission Summarizing the Proceedings of the November 6-7, 1980 Workshop on Low-Level Waste Management Licensing Rule.

24. U.S. Nuclear Regulatory Commission, 10 CFR Part 61, Disposal of Low-Level Radioactive Waste; Availability of Preliminary Draft Regulation, Federal Register, (45 FR 13104-13106), February 29, 1980.

Chapter 2

DEVELOPMENT OF REGULATIONS FOR LLW DISPOSAL

2.1 INTRODUCTION AND SUMMARY

This chapter reviews and resolves three key issues involved in developing a new Part 61 regulation. The resolution of these issues provides the basis upon which the technical and other requirements are developed. These issues are:

1. The type of requirements which should be developed and set out in Part 61 (i.e., performance objective or prescriptive requirements). The preferred alternative approach being followed by NRC in preparing these regulations is to develop both overall performance objectives that define acceptable safety standards that should be achieved in the disposal of LLW, as well as minimum technical requirements to control several key parameters important to assuring that the performance objectives will be met. Prescriptive requirements are established where possible;

2. The alternative methods of disposal which should be addressed in this rulemaking action. Based on an analysis of alternative disposal methods, NRC plans to address not only shallow land burial but also the full range of land disposal technology that can be applied near the earth's surface including shallow land burial, deeper burial and engineered designs; and

3. The methodology and approach that should be used to classify LLW and to direct particular types and forms of waste to disposal methods which ensure their safe disposal. Based on an analysis of alternative methods for classifying radioactive waste, NRC has further developed and applied the methodology previously described in two NRC documents (NUREG-0456 (Ref. 1) and NUREG/CR-1005 (Ref. 2)) to classify radioactive waste based on the requirements for its safe disposal.

2.2 PERFORMANCE OBJECTIVES VS PRESCRIPTIVE REQUIREMENTS

In developing specific regulations for LLW disposal, two basic types of requirements can be established: performance objectives and prescriptive requirements.

A performance objective regulation would establish the overall objectives that should be achieved in the disposal of LLW and leave flexibility in how the objectives would be achieved. The performance objectives would establish general technical requirements on the design and operation of an LLW disposal facility and would include a standard or standards to specify the level of radiological hazard which should not be exceeded at an LLW disposal facility.

A prescriptive regulation would set out specific detailed requirements for the design and operation of an LLW disposal facility. Prescriptive standards would

specify the particular practices, designs, or methods which are to be employed--for example, the thickness of the cover material over a shallow land burial disposal trench, or the maximum slope of the trench walls. NRC considered three alternatives regarding the type of requirements which should be considered in Part 61:

1. Development of performance objective requirements only;

2. Development of prescriptive requirements only; and

3. Development of both performance objective and prescriptive requirements.

2.2.1 Performance Objective

Performance objective requirements, by their nature in establishing overall objectives, would allow maximum flexibility in the application of new technology and innovative solutions to assuring safety in the disposal of LLW. They would allow for a systems' type approach in that the performance of the "disposal system" would be based on the combined interaction and effectiveness of the many factors or component parts of a disposal system. Positive and negative characteristics can be balanced such that the performance of all characteristics in combination can be considered rather than just the characteristics of one element. This would allow for consideration of site-specific conditions and variation in the design, operation and characteristics of waste on a site specific basis.

Performance objective requirements, however, require more effort and time in development as well as in licensing of specific facilities due to the large number of factors that must be considered to determine compliance. In addition, it may not be totally clear to an applicant or interested person how to design and operate a disposal facility to meet the general objectives.

2.2.2 Prescriptive Requirements

This approach would prescribe the specific methods, designs and practices which should be applied in disposal. It requires a thorough understanding of all the potential methods, designs and practices that can be applied in the disposal of LLW. It also assumes that the state of the art in disposal technology is developed to the point where there are clear choices to be made among all the potential alternatives that could be used. It would be easy for an applicant or licensee to demonstrate compliance with prescriptive requirements (and for NRC to license and inspect against them) since engineering limits are established which can be readily measured or calculated and the specific requirements for the design and operation of a LLW disposal facility would be clearly defined and readily apparent to an applicant or licensee.

Prescriptive requirements would, however, tend to discourage use of new or creative solutions to waste disposal problems even though they might result in lower environmental impacts and monetary costs. Prescriptive requirements are difficult to derive and would need to be frequently revised as the type and form of waste changed and as technology advanced. Prescriptive requirements

would also tend to concentrate on the individual components of a disposal system and would tend to treat all wastes uniformly regardless of hazard potential.

2.2.3 Performance Objective and Prescriptive Requirements

This approach would involve the establishment of overall objectives to define a level of safety for LLW disposal and subsequent development of specific technical requirements to assure that the overall performance objectives are met. This approach would allow for:

1. Increased flexibility in determining the disposal requirements of particular waste streams;

2. Increased flexibility in accounting for site-specific environmental conditions;

3. Increased ability to incorporate improvements in technology for LLW forms, packaging and disposal;

4. Specification of minimum technical and prescriptive requirements based on current understanding and known problems of the past; and

5. More rapid future development of technical requirements for alternative disposal methods.

Finally, this approach allows for consideration of the individual components of an LLW disposal system and their contribution toward achievement of the overall performance objectives as well as consideration of the combined effectiveness of these components as a system.

2.2.4 Comparative Analysis

NRC believes that development of a regulation using solely prescriptive requirements or solely performance objectives would not prove effective for the future regulation of LLW disposal. Given the wide variation in the form and characteristics of waste that has and will continue to be generated; given the wide range in potential site characteristics in various regions of the U.S.; and given the fact that technological innovation in waste disposal problems is now receiving greater emphasis in finding improved solutions to LLW disposal problems, requirements of both types are needed. Minimum performance objective standards are necessary to define the overall performance expected in LLW disposal, whereas specific minimum technical requirements are necessary to avoid recognized undesirable characteristics based on past experience and current understanding. The alternative of establishing purely prescriptive requirements could result in a collection of ad hoc requirements without a clear picture as to the overall effectiveness of such requirements. This could lead to a situation not greatly different from the current situation. Development of purely performance objective requirements, while workable, would not allow for establishment of more detailed prescriptive requirements in those areas where specific guidance is known to be needed.

In this rulemaking effort, NRC thus plans to establish overall performance objectives or standards of performance that should be achieved in the disposal of LLW, minimum technical performance requirements that should be considered in all cases in the disposal of LLW and where possible, detailed prescriptive requirements. Subsequent to this rulemaking, NRC plans to publish regulatory guides in the areas of waste form, site suitability and design and operations which will provide detailed prescriptive guidance.

2.3 ALTERNATIVE DISPOSAL METHODS

As a part of its LLW program leading to development of this EIS and LLW regulation, (Ref. 3) NRC conducted a study of alternative LLW disposal methods to help ensure that all viable disposal methods were considered and that the initial issuance of the regulation and subsequent amendments would be directed at and based on the methods of disposal that would most likely be used. The first part of this study consisted of an investigation and screening of possible alternative disposal methods and selection of those that appeared most viable and which should be evaluated further. To help assure completeness of the initial listing and adequacy of the selection of viable alternatives, a panel of technically competent individuals of recognized waste management expertise was consulted for review and guidance. The results of this effort were published as NUREG/CR-0308 "Screening of Alternative Disposal Methods for the Disposal of Low-Level Radioactive Waste" (Ref. 4). The second part of the study involved a further evaluation of those alternatives selected as being most viable. The analysis was generic in nature and considered technical, political and economic factors in the analysis. The results of the analysis were published as NUREG/CR-0680 "Evaluation of Alternative Methods for the Disposal of Low-Level Radioactive Wastes" (Ref. 5).

On the basis of this analysis, five disposal alternatives were identified as most promising. These included:

1. Shallow land burial;
2. Deeper "intermediate" depth burial;
3. Mined cavity disposal;
4. Engineered structures; and
5. Ocean disposal (ocean dumping and sea-bed disposal with projectiles).

The study also concluded, that although further specific detailed analysis of individual disposal methods was needed, the results did not indicate any compelling health, safety or environmental reason to abandon existing disposal methods (e.g., shallow land burial) in place of an entirely new method of disposal such as mined cavity disposal. The disposal of radioactive waste in outer space was considered to be not developed to the point of technical and economically feasible use.

In considering the development of regulations for LLW disposal, NRC was thus faced with two basic categories of alternatives: Ocean disposal (including ocean dumping and sea-bed projectiles) and land disposal (involving both near surface and deep disposal techniques).

Although ocean disposal had been used by the U.S. previously and is currently being used by the Europeans, the U.S. has not practiced ocean disposal since 1970. There is some current interest in resuming ocean disposal operations. Under the Marine Protection, Research and Sanctuaries Act of 1972, the Environmental Protection Agency has responsibility and a program underway leading to development of criteria and procedures for issuing permits for sea disposal of LLW. In addition, disposal requirements for ocean and land disposal may be sufficiently different that they should be developed separately. Public comments in response to the advance notice of proposed rulemaking also expressed concern regarding the ocean disposal of LLW. NRC has, therefore, concentrated its regulations development efforts on land disposal methods.

As noted earlier, land disposal methods logically divide into two subcategories: those that take place near the earth's surface and those that involve very deep disposal. Near surface disposal encompasses the full range in technology that can be applied in LLW disposal near the earth's surface: i.e., shallow land burial, deeper burial (depths of 15-20 meters) and the use of engineered designs, barriers and other concepts. This EIS and initial regulations development effort concentrates on land disposal requirements and specific requirements that should be applied to assure safety in the disposal of LLW by near-surface disposal technology. It is in wide use today and there is no compelling health and safety reason to abandon near-surface disposal technology in place of something different. Specific requirements for methods of very deep disposal such as deep mined cavities are not considered in this EIS, but will be addressed by NRC in a subsequent rulemaking effort. In addition, there are other specific types of disposal methods such as hydrofracture and deep well injection that have been successfully used. These methods are not being specifically addressed in this EIS since they will only work well for a very narrow range of waste types and require specific hydrogeological media characteristics. They will be dealt with at a later time.

2.4 RADIOACTIVE WASTE DISPOSAL CLASSIFICATION

In recognition of the wide range of potential hazards that may exist with different types and forms of LLW, NRC undertook a study to determine how various types and forms of LLW should be defined, classified or controlled for purposes of waste disposal. As early as 1974, the AEC had proposed to prohibit the burial of transuranic (TRU) contaminated commercial waste (Ref. 6). In the proposed rule, a measurement sensitivity limit of 10 nanocuries TRU waste per gram of material was proposed. Material exceeding the concentration limit, would have been consigned to retrievable storage facilities operated by the federal government pending the development of a facility for the ultimate disposition of the waste. Several problems, however, in implementation of the rule were identified by persons commenting on the proposed rule, and the rule was never adopted by the AEC for commercial waste.

At the same time, the staff recognized that there were other nuclides and waste types that should be controlled in disposal, as well as TRU contaminated waste, and initiated a waste classification study to define the concentrations of individual nuclides and disposal requirements that should be applied to

assure their safe disposal. The study has divided into three major parts. The first part involved examination of alternatives for classifying LLW and selection of a preferred approach. This part is described in the report "Determination of a Radioactive Waste Classification System," UCRL-52535 (Ref. 7). The second part involved development and application of a methodology to classify wastes following the preferred approach selected. This part is described in two reports, "A Classification System for Radioactive Waste Disposal--What Waste Goes Where?," NUREG-0456 (Ref. 1) and "A Radioactive Waste Disposal Classification System," NUREG/CR-1005 (Ref. 2). The third part of the study was carried out as a part of this EIS and involves development of a waste disposal classification regulation and, a decision basis for the final classification values.

2.4.1 Alternative Classification Systems Examined

There are two dominant aspects of LLW disposal that must be considered in the development and application of any waste classification system: the characteristics and properties of LLW and the performance capability presented by alternative disposal methods and variations within each method. The characteristics of LLW present wide ranges in degrees of radiological, chemical, biological and physical hazards as well as in degrees of persistence of the hazards. Individual disposal techniques also present varying degrees of containment and isolation capability. Near surface techniques, for example, place the waste in an area that is readily accessible to man, while others, such as deep mines, present greater difficulties in accessibility.

Other considerations that needed to be addressed in the classification of LLW included:

1. Any classification system developed must be applicable to all sources of waste and must provide a common basis for application by those generating the waste as well as those disposing of the waste.

2. It must provide a sound basis for determining the controls (or requirements) that must be placed on the disposal of the waste to assure protection of the public health and safety and environment and minimize the need for long-term social commitment.

3. The system should be practical and implementable without placing undue burdens on those directly affected by it.

NRC initially examined a number of existing classification systems for radioactive waste to see if any could be utilized and applied. As a part of this effort, assistance was also sought from representatives of industry, government, the public, and research and educational institutions through a technical advisory panel. The panel assisted in evaluating existing classification systems and in providing guidance to NRC in the selection of an approach which NRC could apply in classifying LLW. Some of the systems examined included existing classification systems such as:

- The International Atomic Energy Agency Radioactive Waste Categories;
- The American Institute of Chemical Engineers Radioactive Waste Categories;
- The American National Standards Institute Radioactive Waste Categories; and
- The Atomic Energy Commission Radioactive Waste Management Classifications.

Members of the Technical Advisory Panel also proposed five additional classification systems to provide further guidance and alternatives for consideration. These five systems and the existing systems considered are described in detail in the report "Determination of a Radioactive Waste Classification System," UCRL-52535 (Ref. 7).

2.4.2 Preferred System Selected

Based on this study, the existing classification systems generally fell into three categories: those based on the source or generator of the waste (e.g., reactor wastes, medical wastes, industrial wastes); those based on the characteristics of the waste (e.g., solid, liquid, gas) and those based on the method of disposal (e.g., shallow land burial, ocean dumping, deep geological repository).

Classification of waste based on the "source of waste" was not considered useful since it would reveal little about the characteristics of waste and the requirements needed for its safe disposal. Likewise the characteristics and properties of the waste needed to be considered in developing a classification system but not to the exclusion of the method to be used for disposal.

It was concluded, therefore, that the preferred approach should be to develop a classification system based on the method or requirements that should be applied for disposal. The requirements for disposal could then be defined by the waste characteristics, the containment and isolation capabilities of the method of disposal and the social commitment controls required to assure safe disposal of the waste.

A methodology to classify waste based on this preferred alternative was subsequently developed and is reported in detail in NUREGs-0456 and 1005 (Refs. 1 and 2). The methodology developed involved identifying a set of exposure events at model waste disposal facilities, describing potential radionuclide transport to man, and then calculating limiting concentrations or inventories of radionuclides in waste that may be placed in the model disposal sites to ensure that specified dose guidelines would not be exceeded. The set of potential exposure events that was considered in the analysis included events in which individuals may come in contact with the waste (e.g., inhalation of dust by an intruder digging in the waste at a future point in time) and events in which the waste radioactivity was transported offsite by water or air (e.g., groundwater migration to a water resource pathway). Preliminary activity

concentrations or inventories of material were calculated that would assure that the doses to any potentially exposed individual or total population would not exceed proposed acceptable dose guidelines assumed for purposes of the study. This is the approach that NRC has followed in developing a classification system for LLW. The details are presented in Chapter 7.

2.4.3 Other Issues Regarding Classification

Two final issues remain regarding classification. One involves classifying radioactive waste on the basis of total hazard. The second involves establishment of a de minimis classification of wastes. Each is discussed below.

2.4.3.1 Classification by Total Hazard

Given the wide range in potential hazards presented by LLW (e.g., chemical, biological, physical as well as radiological), NRC also initiated a study to examine chemical and other hazards associated with LLW and to examine if a quantitative method could be developed and applied for comparing radiological hazards with chemical hazards (Ref. 8). Also, recently the draft document "Managing Low-Level Radioactive Wastes: A Proposed Approach" (Ref. 9) suggests that a classification system should be developed based on total hazard-chemical, biological and physical as well as radiological. Based on the study results and current technical abilities to characterize potential effects of biologically and chemically hazardous wastes and to make direct comparisons with potential radiological hazards, it is not technically feasible at this time to break down all the different hazards and to assign a hazard factor that represents some weighted index of hazard.

Thus, NRC does not plan to address classification of waste by total hazard as part of its classification of LLW. Disposal requirements will be determined based principally on radiotoxicity. NRC plans, however, through specific requirements on waste form and content, to address associated potential chemical, biological and physical hazards. In general, the site and other requirements being developed for radioactive waste should be adequate to cover other hazards.

In some cases NRC is also taking specific action to eliminate or minimize potential chemical and biological hazards. A good example of this relates to the emphasis NRC has placed on the incineration of liquid scintillation fluids to destroy the organic solvents rather than continuing to utilize land disposal (Ref. 10).

Finally, as EPA develops its program of regulation for chemically hazardous waste, NRC will review EPA requirements for application at LLW disposal sites. The methodology and approach NRC is developing for classifying waste is sufficiently flexible that it should be able to accommodate any classification system EPA may develop for hazardous waste.

2.4.3.2 De Minimis

NRC recognizes the need for a "de minimis" classification of wastes that would be exempt from Part 61 and would be considered of no regulatory concern. NRC

believes, however, as has been recommended by the Federal Radiation Policy Council (Ref. 11), and supported by public comments in the scoping process that such exemptions should be determined on a specific waste stream basis. In this regard, a final rule was recently published that establishes such an exemption in a new §20.306 for tritium and carbon-14 not exceeding a concentration of 0.05 μCi/gm when contained in liquid scintillation cocktail and animal carcass waste (Ref. 12). Other waste streams may also readily lend themselves to treatment in this manner. Finally, as a part of each specific licensee's program, authorization can be obtained to store very short half-life radionuclides for decay (generally for 10 half-lives) and to dispose of such waste as nonradioactive waste according to the other properties of the waste. Thus, through this EIS, NRC does not plan to establish a generic "de minimis" category for waste.

REFERENCES

1. Adam, J. A., V. C. Rogers, A Classification System For Radioactive Waste Disposal-What Waste Goes Where?, NUREG-0456, June 1978.

2. Rogers, V.C., A Radioactive Waste Disposal Classification System, Volumes 1 and 2, NUREG/CR-1005, prepared for U.S. Nuclear Regulatory Commission by Ford, Bacon and Davis Utah Inc., September 1979.

3. U.S. Nuclear Regulatory Commission, The Nuclear Regulatory Commission Low-Level Radioactive Waste Management Program, NUREG-0240 September 1977.

4. Macbeth, P. J., et al., Screening of Alternative Methods For the Disposal of Low-Level Radioactive Waste NUREG/CR-0308, prepared for NRC by Ford, Bacon and Davis Utah, Inc., October 1978.

5. Macbeth, P. J., et al., Evaluation of Alternative Methods for the Disposal of Low-Level Radioactive Waste, NUREG/CR-0680, prepared for NRC by Ford, Bacon and Davis Utah, Inc., July 1979.

6. U.S. Atomic Energy Commission, 10 CFR Part 20, Transuranic Waste Disposal, Proposed Standards for Protection Against Radiation, Federal Register, 39 FR 32921, September 12, 1974.

7. Cohen, J. J., W. C. King, Determination of a Radioactive Waste Classification System, Lawrence Livermore Laboratory, University of California UCRL-52535, March 1978.

8. General Research Corporation, Study of Chemical Toxicity of Low-Level Wastes, prepared for U.S. Nuclear Regulatory Commission, NUREG/CR-1793, Volumes 1 and 2, November 1980.

9. EG&G Idaho, Inc., Managing Low-Level Radioactive Wastes, A Proposed Approach, Low-Level Waste Strategy Task Force, LLWMP-1, August 1980.

10. Roche-Farmer, L., Study of Alternative Methods for the Management of Liquid Scintillation Counting Wastes, NUREG-0656, U.S. Nuclear Regulatory Commission, February 1980.

11. U.S. Radiation Policy Council, Progress Report and Preliminary 1981-83 Agenda, RPC-80-001, September 1980.

12. U.S. Nuclear Regulatory Commission, 10 CFR Part 20, Biomedical Waste Disposal, Federal Register, 46 FR 16230, March 11, 1981.

Chapter 3

DESCRIPTION OF THE AFFECTED ENVIRONMENT AND APPROACH FOLLOWED IN PREPARING THIS EIS

3.1 INTRODUCTION

The environment affected or potentially affected by the generation, transport and disposal of LLW encompasses the whole of society. It consists of all the industries, hospitals, private individuals, government agencies and laboratories that generate LLW through the use of radioactive materials as a normal part of their day-to-day activities and functions. It consists of those involved in providing services such as supplying packaging and waste processing services at waste generator facilities and transporting waste from waste generator to disposal facilities. It consists of those involved in the ownership, operation and long-term control of the disposal facilities and the various regulatory agencies such as NRC, DOT and the state radiation control programs that license, regulate and inspect all phases to assure an adequate level of safety. It consists of society; the individuals, small population groups (e.g., radiation workers) and the general population that can be potentially affected by the various activities involved in the generation and disposal of waste. Finally, it consists of the natural environment including the ground and surface water, the atmosphere and various plant and animal species that would be affected by site-specific activities.

The affected environment for a rulemaking is, by nature, quite differently divided into direct and indirect segments than the affected environment described for a specific facility that might be proposed to be licensed. In the case of a rulemaking proceeding, the environment experiencing direct impacts are those parts which may have to change their way of carrying out specific activities or whose activities would be influenced if a new regulation were developed. Included would be the generators of waste, those providing services, the regulatory agencies, those owning and operating disposal sites, and society as a whole. The parts of the environment experiencing indirect impacts would be the natural environment with respect to the impacts on ground water, air, and plant and animal species due to application of the rule at a specific site.

In this EIS, NRC has concentrated on those segments of the environment that would experience the greatest impacts; those generating and disposing of the waste, society and the natural environment that would be affected by the costs, exposures and commitment of social and natural resources required to properly dispose of LLW. In analyzing the impacts of disposal, NRC divided the disposal process into three principal phases: (1) generation involving the processing of waste prior to disposal either at the point of generation or at a central location, (2) transportation of the waste from the point of generation to the disposal location, and (3) disposal of the waste.

In the following sections, the process NRC has followed in this EIS to characterize and analyze the affected environment involving the generation, transport, and disposal of waste and the impacts on each segment due to

development of a new Part 61 rule is described. Section 3.2 reviews the approach NRC has followed in this EIS leading to development of performance objectives, technical and other requirements that are being codified through the Part 61 rulemaking action. Section 3.3 explains how NRC developed a base of data about LLW, methods of disposal and a calculational methodology to perform the required analyses. Section 3.4 deals with waste generation. It describes the waste generators and explains how NRC has organized a base of data about the sources and characteristics of waste to place it into a form and size that is manageable for purposes of this EIS. Section 3.5 deals with transportation. It describes the type of packaging and transport vehicles used, frequency of shipments, miles travelled, costs and other data. Section 3.6 deals with disposal. It describes the disposal of waste as it has been carried out through the characterization of a reference (base case) near-surface disposal facility. Analysis of the disposal of waste at the reference facility is performed in Chapters 4, 5, 6, and 7 and provides a base line level of the costs and impacts presented by the generation, transport, and disposal of waste. It represents the "no action" alternative. The incremental changes to these base line costs and impacts due to application of various alternatives which would be implemented because of new requirements in a new Part 61 regulation can then be evaluated leading to the selection of preferred requirements. Section 3.7 describes the various design and operations alternatives analyzed in the EIS. Section 3.8 describes the methodology developed to calculate various impact measures and the impact measures selected for use in this EIS to characterize the costs, benefits and radiological impacts of the generation, transport, and disposal of LLW. The impact measures, which include dose to members of the public, occupational exposures, costs, energy, and land use, are applied to evaluate the costs and benefits of the various alternatives analyzed in Chapters 4, 5, 6, and 7. The analyses in Chapters 4, 5, 6, and 7 provide the basis for decisions on the specific performance objectives and technical requirements that should be included in Part 61. After selection of the preferred requirements, Chapter 10 analyzes the typical unmitigated costs and impacts of application of the rule to various sectors of society and the environment.

3.2 APPROACH TO PREPARATION OF THIS EIS

The performance objectives and technical requirements for low-level waste disposal are being developed based on the results of the analyses presented in this EIS. The analyses are tiered from the generic to the specific. First, overall performance objectives are evaluated and preferred objectives are selected to define a level of safety and social commitment that should be achieved in the disposal of LLW. Second, technical requirements for the near-surface disposal of waste are evaluated based on the performance objectives and preferred requirements are selected. The performance objectives and technical requirements collectively establish a classification of waste for near-surface disposal in that they define the controls which should be applied in the near-surface disposal of waste (and which wastes are generally not acceptable for near-surface disposal). Administrative and procedural requirements for licensing the land disposal of LLW are evaluated and preferred requirements selected. The need for and provisions for adequate

financial assurance for closure, postclosure care and institutional control are evaluated and preferred requirements selected. Finally, the unmitigated impacts of application of the preferred requirements are analyzed through evaluation of disposal of waste on a regional basis in accordance with the preferred requirements.

3.2.1 Need for Performance Objectives

NRC initially planned to develop only the technical requirements needed to assure safety and environmental protection in the disposal of LLW. These requirements would have been derived from a consideration of the currently established level of safety and environmental protection that should be achieved in LLW disposal. In evaluating the level of safety which should be achieved, NRC identified 3 components that needed to be considered:

1. Protection of occupationally exposed workers and the public during operation of the facility;

2. Long-term environmental protection; and

3. Protection of an inadvertent intruder.

A level of safety has been established for occupationally exposed workers and protection of the public during operation of the facility and is set out in the existing standards in 10 CFR Part 20 which applies to the activities of all NRC licensees. However, neither the federal government nor national and international organizations have defined such a level of safety specific to the disposal of LLW involving long-term environmental protection and protection of an inadvertent intruder. NRC thus had to also establish performance objectives to define the level of safety which should be achieved for each of these in disposal. With respect to standards on long-term releases to the environment, the Environmental Protection Agency is developing such standards through its overall program to develop generally applicable environmental standards; however, no standard for LLW disposal presently exists. Protection of an inadvertent intruder is a new concept, generally unique to disposal of waste. There are no existing standards for protection of an inadvertent intruder. In addition, there was a fourth component, generally unique to waste disposal that also needed to be addressed; long-term social commitment. Future generations should not be burdened with long-term expensive commitments to care for wastes generated today, and the development of requirements for the disposal of waste should take into account the long-term commitment of social and natural resources to care for waste over the long term. Thus, in addition to development of the technical requirements for how waste should be disposed of to meet an acceptable defined level of safety, NRC also had to develop and define such a level of safety for two areas--long-term environmental releases, and protection of an inadvertent intruder. (A level of safety for short-term operations has already been defined through 10 CFR Part 20.) NRC also had to consider the level or degree of social commitment that should be applied in the disposal of waste. These performance objectives would establish the level of safety and environmental protection that should not generally be exceeded in the disposal of LLW and the social commitment required in disposal.

3.2.2 Development of Performance Objectives, Technical and Other Requirements

The approach NRC has followed in the analyses of LLW disposal is to first analyze the generation and disposal of LLW as it has been carried out to see what the costs and impacts are. This analysis is termed the "base case" analysis and represents the "no action" alternative--i.e., no new requirements are developed and past practices continue. NRC next analyzes a range of modifications and improvements (alternatives to the base case) that could be applied with current technology and calculated the costs and impacts of such modifications and improvements. A range of alternative numerical performance objectives for intrusion and long-term environmental protection are also evaluated. These analyses are then utilized to select performance objectives for the intruder, environmental releases and social commitment. The preferred numerical objectives are selected based on a comparative evaluation of costs and benefits, are achievable today with existing technology and require some increased cost and effort. The objectives selected define an improved level of safety and environmental protection and reduced degree of long-term social commitment than that expected from past operations.

The analyses also identified three key aspects that are of most significance in ensuring long-term safety and environmental protection and in minimizing the degree of social commitment in the near-surface disposal of waste. These are: long-term stability of the disposal site; liquids in waste and the contact of water with waste both during operations and after closure; and institutional and other controls to reduce the likelihood of inadvertent intrusion. These three key aspects are then translated into technical requirements that must be applied in the near-surface disposal of waste. These requirements are applied to the four principal and readily identifiable components of a disposal system: site characteristics, site design and operations, waste form and packaging, and institutional control.

In analyzing past practices at the existing sites, only natural characteristics of the disposal site environment had been principally relied upon to provide confinement of the waste over the long term. The experiences at several of the existing sites have shown the need to consider several components collectively--a series of "multiple barriers"--rather than relying principally on just one component (i.e., the site).

This concept can be carried to an extreme such that each component of the system is designed so that it will guarantee success regardless of the performance of the other components. NRC has not followed this approach but has set levels of performance for each component, so that when considered individually, each will provide a degree of assurance and when considered collectively will provide a high level of assurance that the performance objectives will be met over the long term.

The following components collectively encompass the LLW disposal system and were specifically addressed in the development of technical criteria:

1. Site Characteristics - The geohydrological, geomorphological, climatological and other natural characteristics of the site on which the disposal facility is located.

2. Design and Operations - The methods by which the site is utilized, the disposal facility design, the methods of waste emplacement, and closure of the site.

3. Waste Form and Packaging - The characteristics of the waste and its packaging.

4. Institutional Controls - The actions, including assurance of adequate financial resources, which involve a government agency maintaining surveillance, monitoring, and control over access and utilization of the site after closure.

NRC next analyzed a range of specific alternatives that could be used in near-surface disposal to help ensure long-term stability, reduce water contact with waste, and reduce the potential for inadvertent intrusion. In some cases, based on the alternatives analysis and past known experience at the existing sites, a specific prescriptive requirement was selected and applied. For example, with respect to the use of active institutional controls to prevent inadvertent intrusion, NRC analyzed a range of alternative time periods for such controls (from 50-300 years) and selected 100 years as the preferred time upon which reliance should be placed on such controls. In a second case, placing certain higher activity wastes into a stable waste form, NRC evaluated a range of alternatives (including waste processing, use of containers and facility design) but selected no preferred alternative. In this case, each alternative presented an equivalent degree of long-term stability at a range of costs depending upon the particular type and volume of waste and the individual capabilities of the waste generator. No specific prescriptive requirement was selected to allow maximum flexibility in meeting the objective, to allow for individual preferences and capabilities and to allow for individual cost-benefit determinations. The performance objectives and technical requirements selected also collectively establish a definition or classification of waste for near-surface disposal in that they define the controls which should be applied in the disposal of waste at a near-surface disposal facility (and also define which wastes are generally not acceptable for near-surface disposal). NRC considered some alternatives for setting out the classification system and selected the alternative of establishing concentration limits for individual nuclides in wastes that generators and disposal site operators could readily apply in determining the classification of a particular waste and the particular controls that should be applied in the disposal of that waste.

As a part of the development of the minimum technical requirements, NRC also analyzed the need for financial assurance to cover the cost for closure and postclosure surveillance, monitoring and care. A range of alternatives was reviewed and requirements were developed from the preferred alternatives to ensure adequate financial assurance in the disposal of LLW. The results of the base case "no action" and alternatives analyses are set out in Chapters 4-6. The classification of waste for near-surface disposal is set out in Chapter 7. Financial assurance is addressed in Chapter 9.

Finally, as part of development of the technical requirements, NRC examined the existing administrative and procedural requirements that are applied by

NRC in the licensing of LLW disposal facilities including procedures for participation by states and others in the NRC licensing process. Alternatives for improvement were analyzed and preferred alternative changes to these procedural requirements were selected. The results of this analysis are set out in Chapter 8.

3.2.3 Codification of Requirements into a New Part 61 Rule

The performance objectives, technical and other requirements developed through the analyses presented in Chapters 4-9 collectively form the basis for the new requirements to be codified through the Part 61 rulemaking actions. The requirements developed seemed to fall into one of three categories: (1) requirements which were a codification of existing practice, (2) requirements which represented an improvement or deviation from existing practice, and (3) requirements which seemed to fall into both categories (1) (2)--e.g., a practice that may only currently be applied at one site. For those requirements which codified existing practice, no cost-benefit evaluation was carried out since they represent current state-of-the-art and are reflected in the base case analysis. For these, the cost of complying with the requirement was considered and included in the base case cost data and the impacts reflected in the impacts for the base case analysis. Requirements in Category 2 that represented improvements or modifications were subjected to cost-benefit evaluation in terms of the incremental cost increase over the base case and the resultant change (increase or decrease) in impacts resulting from application of the new requirement. For those in category (3), staff judgment was applied in placing the requirement into either category (1) or (2).

The results of the analyses presented in Chapters 4-9 indicate that with modest increases in cost relating to improving the form and properties of waste shipped for disposal and modest improvements in the design and operation of a near-surface disposal facility (many of which are being used at some of the existing sites today) the potential health, safety, and environmental impacts from disposal of LLW and the degree of long-term social commitment can be greatly reduced. The ability to predict the long-term performance and impacts of near-surface disposal facilities is also greatly improved and the uncertain and high costs required to care for disposal sites over the long term are reduced. Stated simply--we can put some modest increased effort and cost into the disposal of LLW today leading to reduction in potential impacts, reduction in long-term care costs and increased confidence in the performance capability of near-surface disposal facilities. Or, we can continue as we have in the past possibly leading to situations as has been evidenced at some existing sites where the potential impacts over the long term may be high, the costs for long-term care high, and confidence in the long-term performance low. The proper course of action is the former and the performance objectives, technical, and other procedural requirements selected are set out in a new Part 61 regulation and in amendments to existing parts of NRC's regulations.

3.2.4 Unmitigated Impacts of Implementing Part 61

Finally, as a part of this EIS, NRC has also conducted an analysis of the preferred requirements to be included in the new Part 61 rule to better judge

their applicability to the wide range in site and waste characteristics expected through regional disposal of LLW and to better judge the overall impacts of implementation of the rule. This analysis involves application of the requirements at several regionally located sites where the waste generated within each region is shipped for disposal. Each of the disposal facilities is sited, designed, and operated in compliance with the preferred requirements accounting for regional differences and variations that might be expected. The results of this analysis are set out in Chapter 10.

3.3 DEVELOPMENT OF DATA BASES FOR THE ANALYSES

To perform the base case and alternatives analyses, NRC developed a base of information and data about the affected environment and LLW disposal--who generates the waste; how is it processed, packaged, and shipped for disposal; how is it disposed of today; and what kinds of modifications and improvements can be made to existing practices and at what cost. In addition, NRC developed a methodology to calculate the costs and impacts of various combinations of site features, waste characteristics, designs, operating procedures, closure and long-term care conditions.

The data was divided into 5 major portions as follows:

- Information on the sources, characteristics, treatment and packaging of LLW. (Set out in Appendix D)
- Information on the siting, design, operation, closure and long-term care of a reference LLW disposal facility. (Set out in Appendix E)
- Information on possible technological improvements and variations that could be applied to near-surface disposal technology. (Set out in Appendix F)
- Information on assuring adequate financial resources and arrangements for site operations, closure and long-term care. (Set out in Appendix K)
- Information on administrative and procedural considerations that should be applied in licensing a near-surface disposal facility. (Set out in Chapter 8)

A description of the methodology developed to calculate the costs and impacts for disposal is set out in Appendices G and H.

The application and use of these data bases in this EIS and their interrelationship is described below including the major assumptions made and method of analysis used. Each is described in greater specific detail in the referenced appendices.

As noted earlier, the data has been developed and analyzed according to three major phases: generation of the waste (described in Section 3.4), transport of the waste (described in Section 3.5), and final disposal (described in Section 3.6).

3.4 WASTE GENERATION

This section describes the affected environment made up of those generating LLW. It includes the industries, hospitals, colleges, and others who generate LLW; the physical, chemical, radiological, and other characteristics of the wastes as it is generated; the volume of the waste as it is generated; changes in waste characteristics due to treatment or processing of the waste; the packaging used for transport and disposal; and the occupational exposures, population exposures, costs and energy used for processing, packaging and handling of the waste at the point of generation.

3.4.1 Waste Generators

LLW is generated by more than 20,000 NRC and Agreement State licensees throughout the country and by a number of government operations, particularly Department of Energy (DOE) facilities. While some DOE wastes were previously disposed of at commercial disposal facilities, all DOE wastes are now disposed of at DOE owned and operated facilities which are not subject to NRC or Agreement State licensing authority. Such wastes are thus not addressed in this EIS. The waste addressed in this EIS is generated by a wide variety of licensed programs including fuel cycle facilities such as nuclear power reactors, reactor fuel fabrication plants and uranium hexafluoride conversion plants. Other wastes are generated by a number of nonfuel cycle facilities including hospitals, medical research institutions, colleges and universities, industrial research labs, government labs, facilities involved in the production of radiopharmaceuticals, and other industrial uses of radioactive materials.

3.4.2 Description of the Waste as Generated

In general, the waste is very diverse in terms of volume, activity, and characteristics. It essentially includes everything that is discarded as waste and ranges from trash that is only suspected of being contaminated to highly radioactive activated structural components from nuclear power reactors. Currently about 85,000 m^3 (3 million ft^3) of commercial LLW is generated annually that ranges in activity from hundreds to thousands of curies per cubic meter to less than a few microcuries per cubic meter. Most of the activity disposed of at the commercial sites is contained in a relatively small volume of waste and is generated by less than 100 licensees. The form of the waste generated can be solid, liquid, or gaseous. It can consist of a wide range of chemical forms and can be shipped in a number of different types of packages. Based on projections of LLW volume prepared by NRC for the basic waste streams considered in this EIS, about 3.62 million m^3 (128 million ft^3) will be generated during the period 1980-2000. Of this, about 65% of the waste will be generated by fuel cycle sources and 35% by nonfuel cycle sources. Institutional generators will account for about 19% of the nonfuel cycle sources.

3.4.2.1 Fuel Cycle Facilities

The LLW produced by commercial nuclear power plants can be divided into six basic categories: ion exchange resins, concentrated liquids, filter sludges,

compactible trash, noncompactible trash and nonfuel irradiated reactor components. Ion exchange resins are used in reactors to remove dissolved radioactivity from liquid streams. When spent, they are exchanged and the spent resins are placed into a shipping container (usually referred as a liner) where excess water is removed (dewatering) prior to transfer to a disposal site. In some cases the spent resins may be solidified with binders such as cement or urea-formaldehyde. Resin waste in shipping containers is usually transported in a cask or overpack that is shielded for radiation protection purposes. Concentrated liquid waste is produced by the evaporation of a wide variety of reactor liquid streams. These concentrated liquids are solidified in various materials such as cement, placed in a shipping container, and shipped to a disposal site. Filter sludge is waste produced by precoat filters and consists of powdered filter material. It is used to remove suspended and dissolved material from liquid streams. Filter sludge waste is generally dewatered and placed into a container for disposal. Compactible and noncompactible trash consists of everything from paper towels, plastic, and glassware to metallic components such as pipes and contaminated tools. Nonfuel irradiated components consist of fuel channels, control rods, and in-core instrumentation that has been exposed to in-core neutron flux.

Other nonfuel cycle waste streams include process waste and trash from uranium hexafluoride and fuel fabrication plants. This can include calcium fluoride generated in hydrogen fluoride gas scrubbers, filter sludges and paper, plastic, equipment and other trash. These are generally packaged in 55 gallon drums or larger containers and shipped for disposal.

3.4.2.2 Nonfuel Cycle Facilities

Institutional waste generators include colleges and universities, medical schools, medical research facilities, private physicians and hospitals. These institutions use radioactive materials in many diverse applications including analytical instruments, diagnosis and therapy, research and instruction. The type of waste generated generally falls into six groups: liquid scintillation vials, liquids, biological wastes, trash, accelerator targets and sealed sources. Liquid scintillation vials are generally made of glass and contain organic solvents and small amounts of radioactivity. They are ususally packaged in 55-gallon drums with absorbent material for disposal. Absorbed liquids consist of organic and aqueous liquids generated by various preparatory and analytical procedures involving radioactive material. They are absorbed on media such as diatomaceous earth and packaged in 55-gallon or smaller drums. Biological wastes consists of animal carcasses, tissues and culture media used in research programs. It is usually treated with lime and packaged in 55-gallon drums for disposal. Institutional trash consists mostly of paper, rubber, plastic, broken labware and disposable syringes. Sealed sources consist of radioactive material that has been encapsulated to contain and prevent leakage of the material. Sealed sources are packaged in a shielded container for transport and are sometimes disposed of in toner tubes or caissons backfilled with concrete.

Industrial waste generators include firms engaged in the production of radioisotopes for medical, research and industrial applications; industrial research

and development activities; manufacturing and distribution of products containing radioactive material; and uses in quality control and manufacturing processes. The uses of radioactive materials and resulting wastes produced are diverse and can consist of: sealed sources, compactible and noncompactible trash, radioisotope production wastes, and a range of biological, scintillation and absorbed liquids similiar to those generated by medical and educational institutions.

3.4.3 Characterization of LLW for Purposes of Analysis

Given the large number of individual waste generators and diverse nature of the waste generated, coupled with changes that can be made in the form of the waste due to processing and the number of different types of packaging that can be used, an infinite number of variations are possible. All such variations cannot be analyzed. To characterize such a wide diversity in possible waste streams and to bound the variations that might be expected, NRC analyzed currently available information about the sources, form, content and characteristics of waste. The data base developed, based on this analysis, consists of a projection of the volume and physical, chemical, and radiological characteristics of waste to be routinely generated during the period 1980 to the year 2000.

3.4.3.1 Waste Stream Characterization

Based on the analysis NRC was able to group the major types of wastes generated into 36 individual waste streams. The 36 streams are summarized in Table 3.1. The streams characterize the wastes that are presently being routinely generated or are expected to be routinely generated in the future. The major waste generators analyzed included nuclear fuel cycle facilities such as nuclear power, fuel fabrication and uranium hexafluoride conversion plants, and nonnuclear fuel cycle sources such as hospitals, colleges, research labs, medical isotope production facilities, and industrial facilities. Each waste stream represents a particular type of waste generated by a particular type of waste generator having particular physical, chemical, radiological, and other characteristics unique to that individual stream. (For example, one stream is ion exchange resins, generated by boiling water reactors which contains concentrations of several specific radionuclides. This waste is usually packaged in a dewatered form in a steel liner for disposal.) NRC reviewed existing information and characterized in detail each of the 36 waste streams. The most important radionuclides present in the waste streams were identified and the geometric mean of the range of activity concentrations for each radionuclide observed was determined from available data. The radionuclides considered are shown in Table 3.2. For those streams where limited data was available, estimates were made based on scaling factors from the known composition of similar or related waste streams. Each stream was identified by a particular alphameric symbol for ease in identification during computer analysis (e.g., boiling water ion exchange resins are denoted by B-IXRESIN). The following symbols have been used to denote the major waste generators:

Symbol	Generator
P	Pressurized Water Reactors
B	Boiling Water Reactors

Table 3-1 Waste Streams Considered in Analyses

Waste Stream	Symbol
Group I: LWR Process Wastes	
PWR Ion Exchange Resins	P-IXRESIN
PWR Concentrated Liquids	P-CONCLIQ
PWR Filter Sludges	P-FSLUDGE
PWR Filter Cartridges	P-FCARTRG
BWR Ion Exchange Resins	B-IXRESIN
BWR Concentrated Liquids	B-CONCLIQ
BWR Filter Sludges	B-FSLUDGE
Group II: Trash	
PWR Compactible Trash	P-COTRASH
PWR Noncompactible Trash	P-NCTRASH
BWR Compactible Trash	B-COTRASH
BWR Noncompactible Trash	B-NCTRASH
Fuel Fabrication Compactible Trash	F-COTRASH
Fuel Fabrication Noncompactible Trash	F-NCTRASH
Institutional Trash (large facilities)	I-COTRASH
Institutional Trash (small facilities)	I+COTRASH
Industrial SS* Trash (large facilities)	N-SSTRASH
Industrial SS Trash (small facilities)	N+SSTRASH
Industrial Low Trash (large facilities)	N-LOTRASH
Industrial Low Trash (small facilities)	N+LOTRASH
Group III: Low Specific Activity Wastes	
Fuel Fabrication Process Wastes	F-PROCESS
UF_6 Process Wastes	U-PROCESS
Institutional LSV** Waste (large facilities)	I-LIQSCVL
Institutional LSV** Waste (small facilities)	I+LIQSCVL
Institutional Liquid Waste (large facilities)	I-ABSLIQD
Institutional Liquid Waste (small facilities)	I+ABSLIQD
Institutional Biowaste (large facilities)	I-BIOWAST
Institutional Biowaste (small facilities)	I+BIOWAST
Industrial SS Waste	N-SSWASTE
Industrial Low Activity Waste	N-LOWASTE
Group IV: Special Wastes	
LWR Nonfuel Reactor Components	L-NFRCOMP
LWR Decontamination Resins	L-DECONRS
Waste from Isotope Production Facilities	N-ISOPROD
Tritium Production Waste	N-TRITIUM
Accelerator Targets	N-TARGETS
Sealed Sources	N-SOURCES
Industrial High Activity Waste	N-NIGHACT

*SS: Source and Special Nuclear Material
**LSV: Liquid Scintillation Vial

Table 3.2 Radionulides Considered in Analyses

Isotope	Half Life (years)	Radiation Emitted	Principal Means Of Production
H-3	12.3	β	Fission; Li-6 (n, α)
C-14	5730	β	N-14 (n, p)
Fe-55	2.60	γ	Fe-54 (n, γ)
Co-60	5.26	β, γ	Co-59 (n, γ)
Ni-59	80,000	γ	Ni-58 (n, γ)
Ni-63	92	β	Ni-62 (n, γ)
Sr-90	28.1	β	Fission
Nb-94	20,000	β, γ	Nb-93 (n, γ)
Tc-99	2.12×10^5	β	Fission; Mo-98 (n, γ), Mo-99 (β^-)
I-129	1.17×10^7	β, γ	Fission
Cs-135	3.0×10^6	β	Fission; daughter Xe-135
Cs-137	30.0	β, γ	Fission
U-235	7.1×10^8	α, γ	Natural
U-238	4.51×10^9	α, γ	Natural
Np-237	2.14×10^6	α, γ	U-238 (n, 2n), U-237 (β^-)
Pu-238	86.4	α, γ	Np-237 (n, γ), Np-238 (β^-); daughter Cm-242
Pu-239	24,400	α, γ	U-238 (n, γ), U-238 (β^-), Np-239 (β^-)
Pu-240	6,580	α, γ	Multiple n-capture
Pu-241	13.2	β, γ	Multiple n-capture
Pu-242	2.79×10^5	α	Multiple n-capture; daughter Am-242
Am-241	458	α, γ	Daughter Pu-241
Am-243	7950	α, γ	Multiple n-capture
Cm-243	32	α, γ	Multiple n-capture
Cm-244	17.6	α, γ	Multiple n-capture

Symbol	Generator
L	Light Water Reactors
F	Fuel Fabrication Facilities
U	UF_6 Conversion Plants
I	Institutional Facilities
N	Industrial Facilities

The streams were next divided into four general groups based upon common waste characteristics. The groups are: lightwater reactor process wastes, trash, low specific activity wastes, and wastes having unique special characteristics such as high activity. The grouping of waste streams was done to help increase the flexibility of the data base when considering the application of various waste processing techniques. Finally, six of the waste streams have been separated into two components and the additional six streams resulting from this separation have been denoted by a plus sign after the waste generator symbol (I or N) instead of the usual minus sign. This was done to identify the larger facilities (denoted by the minus sign) which could more easily implement their own waste treatment processes from smaller facilities (denoted by the plus sign) which cannot generally do the same. The as generated (untreated) isotopic concentrations for the various waste streams by group are shown in Table 3.3.

3.4.3.2 Volume of the Waste as Generated

NRC also analyzed currently available information about the current and projected rates of waste generation and calculated the volume of waste for each of the 36 waste streams projected to be generated on a regional basis. The regions used in the calculations correspond to the five NRC regions. The volume for each stream was projected from 1980 through the year 2000. Both high and low estimates of waste generation were considered. In developing the projections, nuclear fuel cycle waste volume was assumed to be proportional to the nuclear electrical generation capacity. Nonfuel cycle waste volumes were assumed to grow at a linear rate based upon least squares fit of existing data on individual waste streams. The "untreated" waste volumes assumed in this EIS are shown in Table 3.4.

3.4.3.3 Processing, Treatment and Packaging

NRC also analyzed the various types of processing and treatment options to which the waste, as generated, could be subjected that would change the as generated waste characteristics. Such processing and treatment could reduce the volume of the waste (e.g., compaction of trash, evaporation of liquids and incineration of combustible waste) or increase the volume of the waste (e.g., addition of absorbent materials to liquids and solidification of liquids with a media such as cement). Such processing would also change the chemical and physical properties of the waste as well as the activity concentration. Depending upon whether the processing or treatment option reduced or increased the volume of waste, volume decrease and increase factors were calculated for each stream processed based upon application of one of the above particular processing or treatment options.

Table 3.3 As Generated (Untreated) Isotopic Concentrations (Ci/m³)

Group 1	P-IXRESIN	P-CONCLIQ	P-FSLUDGE	P-FCARTRG	B-IXRESIN	B-CONCLIQ	B-FSLUDGE
Total	3.36E-02	1.09E-01	1.06E+00	1.86E+00	4.63E00	2.77E-01	5.24E+00
H-3	2.66E-03	3.45E-03	2.59E-03	1.15E-03	1.92E-03	6.24E-04	1.26E-02
C-14	9.74E-05	1.27E-04	9.55E-05	4.25E-05	1.19E-03	3.89E-05	7.78E-04
FE-55	2.34E-03	2.27E-02	3.10E-01	5.55E-01	9.48E-01	7.60E-02	1.44E+00
NI-59	2.79E-06	2.71E-05	3.71E-04	6.60E-04	9.80E-04	7.85E-05	1.49E-03
CO-60	4.53E-03	4.40E-02	6.00E-01	1.07E+00	1.59E+00	1.27E-01	2.41E+00
NI-63	8.61E-04	8.36E-03	1.14E-01	2.04E-01	2.15E-02	1.72E-03	3.25E-02
NB-94	8.84E-08	8.58E-07	1.17E-05	2.09E-05	3.09E-05	2.48E-06	4.70E-05
SR-90	1.94E-04	2.52E-04	1.89E-04	8.40E-05	3.64E-03	1.18E-04	2.37E-03
TC-99	8.23E-07	1.07E-06	8.03E-07	3.58E-07	7.65E-05	2.50E-06	5.00E-05
I-129	2.44E-06	3.16E-06	2.37E-06	1.06E-06	2.04E-04	6.65E-06	1.33E-04
CS-135	8.23E-07	1.07E-06	8.03E-07	3.58E-07	7.65E-05	2.50E-06	5.00E-05
CS-137	2.19E-02	2.85E-02	2.14E-02	9.54E-03	2.04E+00	6.65E-02	1.33E+00
U-235	4.71E-08	6.15E-08	1.46E-07	3.64E-07	5.33E-08	3.44E-08	3.32E-07
U-238	3.71E-07	4.84E-07	1.15E-06	2.87E-06	4.20E-07	2.71E-07	2.61E-06
NP-237	9.06E-12	1.18E-11	2.81E-11	7.02E-11	1.02E-11	6.61E-12	6.38E-11
PU-238	2.60E-05	5.12E-05	4.76E-05	2.51E-04	8.34E-05	1.99E-04	4.66E-04
PU-239/240	1.82E-05	3.31E-05	1.55E-04	3.80E-04	5.34E-05	9.43E-05	2.36E-04
PU-241	7.94E-04	1.44E-03	6.75E-03	1.66E-02	2.60E-03	4.60E-03	1.15E-02
PU-242	3.99E-08	7.25E-08	3.39E-07	8.34E-07	1.17E-07	2.06E-07	5.18E-07
AM-241	1.87E-05	2.99E-05	2.64E-04	1.64E-04	2.32E-05	1.20E-04	1.56E-04
AM-243	1.26E-06	2.02E-06	1.78E-05	1.10E-05	1.57E-06	8.10E-06	1.05E-05
CM-243	9.92E-09	1.17E-08	3.10E-07	1.93E-07	2.70E-08	2.59E-07	2.97E-07
CM-244	1.38E-05	1.92E-05	1.77E-04	1.10E-04	1.82E-05	2.05E-04	2.24E-04

Table 3.3 (continued)

Group 2	P-COTRASH	P-NCTRASH	B-COTRASH	B-NCTRASH	F-COTRASH	F-NCTRASH	I-COTRASH	N-SSTRASH	N-LOTRASH
Total	2.28E-02	5.25E-01	2.35E-02	3.79E+00	5.58E-06	5.33E-06	1.13E-01	1.12E-05	3.53E-02
H-3	3.04E-04	6.99E-03	6.75E-05	1.09E-02	0	0	9.13E-02	0	2.85E-02
C-14	1.12E-05	2.57E-04	4.17E-06	6.73E-04	0	0	5.26E-03	0	1.64E-03
FE-55	5.97E-03	1.37E-01	6.01E-03	9.69E-01	0	0	0	0	0
NI-59	7.11E-06	1.64E-04	6.21E-06	1.00E-03	0	0	0	0	0
CO-60	1.15E-02	2.65E-01	1.01E-02	1.62E-00	0	0	1.04E-02	0	3.25E-03
NI-63	2.19E-03	5.05E-02	1.36E-04	2.19E-02	0	0	0	0	0
NB-94	2.25E-07	5.18E-06	1.96E-07	3.16E-05	0	0	0	0	0
SR-90	2.22E-05	5.11E-04	1.27E-05	2.05E-03	0	0	1.45E-03	0	4.53E-04
TC-99	9.42E-08	2.17E-06	2.68E-07	4.33E-05	0	0	3.39E-09	0	1.06E-09
I-129	2.78E-07	6.41E-06	7.14E-07	1.15E-04	0	0	0	0	0
CS-135	9.42E-08	2.17E-06	2.68E-07	4.33E-05	0	0	0	0	0
CS-137	2.51E-03	5.78E-02	7.14E-03	1.15E+00	0	0	4.56E-03	0	1.42E-03
U-235	7.89E-09	1.82E-07	1.22E-09	1.97E-07	1.18E-06	1.13E-06	0	2.36E-06	0
U-238	6.22E-08	1.43E-06	9.60E-09	1.55E-06	4.40E-06	4.20E-06	0	8.80E-06	0
NP-237	1.52E-12	3.49E-11	2.35E-13	3.78E-11	0	0	0	0	0
PU-238	5.97E-06	1.38E-04	2.30E-06	3.71E-04	0	0	0	0	0
PU-239/240	5.53E-06	1.27E-04	1.16E-06	1.86E-04	0	0	0	0	0
PU-241	2.41E-04	5.55E-03	5.63E-05	9.08E-03	0	0	0	0	0
PU-242	1.21E-08	2.79E-07	2.53E-09	4.08E-07	0	0	0	0	0
AM-241	3.96E-06	9.12E-05	9.67E-07	1.56E-04	0	0	0	0	0
AM-243	2.67E-07	6.15E-06	6.52E-08	1.05E-05	0	0	0	0	0
CM-243	2.74E-09	6.30E-08	1.93E-09	3.12E-07	0	0	0	0	0
CM-244	2.61E-06	6.00E-05	1.49E-06	2.41E-04	0	0	0	0	0

Table 3.3 (continued)

Group 3	F-PROCESS	U-PROCESS	I-LQSCNVL	I-ABSLIQD	I-BIOWAST	N-SSWASTE	N-LOWASTE
Total	1.08E-04	3.80E-04	9.60E-03	1.99E-01	2.06E-01	2.11E-02	
H-3	0	0	5.01E-03	1.42E-01	1.75E-01	0	1.63E-02
C-14	0	0	2.51E-04	8.16E-03	1.01E-02	0	9.36E-04
FE-55	0	0	0	0	0	0	0
NI-59	0	0	0	0	0	0	0
CO-60	0	0	0	3.12E-02	3.99E-03	0	1.47-03
NI-59	0	0	0	0	0	0	0
NB-63	0	0	0	0	0	0	0
SR-90	0	0	4.34E-03	4.34E-03	8.33E-03	0	1.31E-03
TC-99	0	0	0	1.02E-08	6.51E-09	0	7.76E-10
I-129	0	0	0	0	0	0	0
CS-135	0	0	0	0	0	0	0
CS-137	0	0	0	1.37E-02	8.76E-03	0	1.04E-03
U-235	2.30E-05	1.65E-05	0	0	0	4.60E-05	0
U-238	8.54E-05	3.64E-04	0	0	0	1.71E-04	0
NP-237	0	0	0	0	0	0	0
PU-238	0	0	0	0	0	0	0
PU-239/240	0	0	0	0	0	0	0
PU-241	0	0	0	0	0	0	0
PU-242	0	0	0	0	0	0	0
AM-241	0	0	0	0	0	0	0
AM-243	0	0	0	0	0	0	0
CM-243	0	0	0	0	0	0	0
CM-244	0	0	0	0	0	0	0

Table 3.3 (continued)

Group 4	L-NFRCOMP	L-DECONRS	N-ISOPROD	N-HIGHACT	N-TRITIUM	N-SOURCES	N-TARGETS
Total	4.04E+03	1.56E+02	1.50E+01	2.10E+02	2.33E+03	5.76E+03	8.04E+01
H-3	0	1.08E-02	4.20E-02	0	2.33E+03	8.63E+02	8.04E+01
C-14	2.59E-01	5.13E-04	4.51E-05	1.32E-02	0	5.76E+02	0
FE-55	2.23E+03	4.05E+01	0	1.15E+02	0	0	0
NI-59	1.40E+00	4.49E-02	0	6.56E-02	0	0	0
CO-60	1.60E+03	7.28E+01	0	8.48E+01	0	1.73E+03	0
NI-63	2.09E+02	3.69E+00	0	1.06E+01	0	2.30E+02	0
NB-94	8.19E-03	1.42E-03	0	4.47E-04	0	0	0
SR-90	0	4.28E-02	6.27E+00	0	0	1.15E+03	0
TC-99	0	1.20E-05	3.27E-04	0	0	0	0
I-129	0	3.34E-05	2.72E-06	0	0	0	0
CS-135	0	1.20E-05	3.27E-04	0	0	0	0
CS-137	0	3.18E-01	3.73E+00	0	0	1.15EE+03	0
U-235	0	6.84E-05	1.02E-05	0	0	0	0
U-238	0	5.40E-04	3.81E-05	0	0	0	0
NP-237	0	1.32E-08	5.33E-13	0	0	0	0
PU-238	0	1.34E+00	1.97E-04	0	0	0	0
PU-239/240	0	1.77E+00	5.55E-05	0	0	0	0
PU-241	0	3.55E+01	7.10E-03	0	0	0	0
PU-242	0	3.87E-03	9.57E-08	0	0	0	0
AM-241	0	5.29E-03	1.10E-05	0	0	5.76E+02	0
AM-243	0	3.59E-04	1.25E-06	0	0	0	0
CM-243	0	3.46E-04	1.65E-04	0	0	0	0
CM-244	0	3.27E-03	2.88E-07	0	0	0	0

Table 3.4 As Generated (Untreated) Waste Volumes Projected to be Generated-1980 to the Year 2000 (m^3)

	Region 1		Region 2		Region 3		Region 4*	
	Vol.	%	Vol.	%	Vol.	%	Vol.	%
P-IXRESIN	6.93E+03	0.79	1.30E+04	1.34	6.59E+03	1.00	8.14E+03	1.25
P-CONCLIQ	4.87E+04	5.54	9.12E+04	9.45	4.63E+04	7.06	5.72E+04	8.79
P-FSLUDGE	8.56E+02	0.10	1.60E+03	0.17	8.14E+02	0.12	1.01E+03	0.15
P-FCARTRG	4.35E+03	0.50	8.16E+03	0.84	4.14E+03	0.63	5.12E+03	0.79
B-IXRESIN	2.10E+04	2.39	2.51E+04	2.60	2.05E+04	3.12	9.67E+03	1.49
B-CONCLIQ	5.79E+04	6.59	6.93E+04	7.17	5.64E+04	8.60	2.67E+04	4.10
B-FSLUDOE	4.65E+04	5.30	5.57E+04	5.77	4.54E+04	6.92	2.14E+04	3.30
P-COTRASH	8.49E+04	9.66	1.59E+05	16.47	8.07E+04	12.31	9.97E+04	15.33
P-NCTRASH	4.36E+04	4.96	8.16E+04	8.45	4.14E+04	6.32	5.12E+04	7.87
B-COTRASH	5.74E+04	6.54	6.87E+04	7.12	5.60E+04	8.54	2.65E+04	4.07
B-NCTRASH	2.72E+04	3.10	3.26E+04	3.38	2.66E+04	4.05	1.26E+04	1.93
F-COTRASH	4.72E+04	5.37	1.18E+05	12.22	0	0	7.08E+04	10.88
F-NCTRASH	8.34E+03	0.95	2.09E+04	2.16	0	0	1.25E+04	1.92
I-COTRASH	4.36E+04	4.97	3.10E+04	3.21	3.80E+04	5.79	2.81E+04	4.33
I+COTRASH	4.36E+04	4.97	3.10E+04	3.21	3.80E+04	5.79	2.81E+04	4.33
N-SSTRASH	8.98E+04	10.22	1.80E+04	1.86	3.59E+04	5.48	3.59E+04	5.52
N+SSTRASH	8.98E+04	10.22	1.80E+04	1.86	3.59E+04	5.48	3.59E+04	5.52
N-LOTRASH	1.52E+04	1.73	1.01E+04	1.05	1.52E+04	2.32	1.01E+04	1.56
N+LOTRASH	1.52E+04	1.73	1.01E+04	1.05	1.52E+04	2.32	1.01E+04	1.56
F-PROCESS	1.56E+04	1.78	3.91E+04	4.05	0	0	2.34E+04	3.61
U-PROCESS	0	0	0	0	1.41E+04	2.14	1.41E+04	2.16
I-LQSCNVL	1.52E+04	1.73	1.08E+04	1.12	1.33E+04	2.02	9.83E+03	1.51
I+LQSCNVL	1.52E+04	1.73	1.08E+04	1.12	1.33E+04	2.02	9.83E+03	1.51
I-ABSLTQD	1.73E+03	0.20	1.23E+03	0.13	1.51E+03	0.23	1.12E+03	0.17
I+ABSLIQD	1.73E+03	0.20	1.23E+03	0.13	1.51E+03	0.23	1.12E+03	0.17
I-BIOWAST	4.87E+03	0.55	3.46E+03	0.36	4.24E+03	0.65	3.14E+03	0.48
I+BIOWAST	4.87E+03	0.55	3.46E+03	0.36	4.24E+03	0.65	3.14E+03	0.48
N-SSWASTE	3.17E+04	3.61	6.34E+03	0.66	1.27E+04	1.93	1.27E+04	1.95
N-LOWASTE	1.81E+04	2.06	1.21E+04	1.25	1.81E+04	2.76	1.21E+04	1.85
L-NFRCOMP	6.48E+02	0.07	1.04E+03	0.11	6.22E+02	0.09	5.77E+02	0.09
L-DECONRS	7.35E+03	0.84	1.22E+04	1.27	8.05E+03	1.23	7.35E+03	1.13
N-ISOPROD	5.20E+03	0.59	0	0	0	0	0	0
N-HIGHACT	8.09E+02	0.09	5.74E+02	0.06	7.04E+02	0.11	5.22E+02	0.08
N-TRITIUM	2.65E+03	0.30	2.09E+02	0.02	2.09E+02	0.03	4.18E+02	0.06
H-SOURCES	5.78E+01	0.01	4.10E+01	0.00	5.04E+01	0.01	3.73E+01	0.01
N-TARGETS	4.16E+02	0.05	2.95E+02	0.03	3.62E+02	0.06	2.68E+02	0.04
TOTAL	8.78E+05		9.66E+05		6.56E+05		6.50E+05	

*NRC Regions 4 and 5 are combined such that each region generates up to 10^6 m^3 of waste.

Three types of solidification processes or scenarios were assumed for this EIS as follows:

- Scenario A assumes continuation of existing practices resulting in waste performance characteristics which are comparatively less desirable than the following two types. Scenario A solidification is simulated by assuming that 50 percent of the waste stream is solidified using urea-formaldehyde systems and the other 50 percent using cement systems.

- Scenario B assumes improved waste performance characteristics over the previous case. Scenario B solidification is simulated by assuming that 50 percent of the waste stream is solified using cement systems and the other 50 percent using improved synthetic polymer systems.

- Scenario C assumes further improved waste performance characteristics achievable with currently available technology. Scenario C solidification is simulated by assuming that the waste stream is all solidified using improved synthetic polymer systems.

To characterize the change and variation in chemical and physical properties of the waste resulting from application of the processing or treatment options, NRC developed and applied 6 waste form indices: (1) Flammability--the ability of the waste form to catch fire and support combustion; (2) Dispersibility--the dispersibility of the waste form several decades after disposal; (3) Stability-the structural stability of the waste; (4) Leachability--the resistance of the waste form to leaching; (5) Chemical content--the content of chemicals such as chelating agents that could increase mobility; and (6) Accessibility--the accessibility of the radionuclides in the waste to transport by wind and water. NRC also analyzed the type of packaging that could be applied to the various waste streams. The various types of packaging assumed is reviewed in the next subsection. Finally data on the cost, occupational exposures, population exposures and energy use (i.e., gallons of fuel consumed) were calculated for each waste processing and treatment option. It is used in the alternatives analysis to account for the application of specific processing and treatment options to the various waste streams.

3.4.3.4 Waste Spectra

Although it is convenient to characterize wastes by stream for each waste generator, the waste disposed of at a disposal site never consists of just one stream. Rather, it consists of a cross section of all of the streams and there may be large differences between streams and within individual streams regarding the types of processing, treatment and packaging that is used. Thus, there is an infinite number of different types of wastes, in different types of forms, and in different types of packaging that could be shipped for disposal. To bound the range in waste that might be expected to be generated and disposed of, four "waste spectra" were derived. Each waste spectrum represents a cross section of all the waste streams that might be generated

and shipped for disposal under specific conditions of treatment and processing. Each spectrum is defined in terms of the total waste volume, waste performance and radionuclide concentrations that result from the application of a specific combination of waste treatment and processing options to specific waste streams. The spectra thus bound the range in waste that might be expected to be generated and disposed of. Four spectra were developed to characterize a range of alternative waste form properties and processing options from a continuation of existing and some past practices with little additional increase effort and cost to extreme volume reduction and improved waste form at very high effort and cost. Waste Spectrum No. 1 characterizes a continuation of existing and some past waste management practices and is used along with the base case site to calculate base case costs and impacts. Waste Spectrum No. 2 characterizes improvements in the form of the waste through processing and reduction in waste volume with modest expenditures of time and money. No. 3 characterizes further waste form improvements and volume reduction at further increased costs. No. 4 characterizes the maximum volume reduction and improved waste form that can currently be practically achieved. Waste being disposed of today falls between waste spectra Nos. 1 and 2, with the trend moving toward spectrum 2. Implementation of license conditions in effect at the existing sites regarding solidification of higher activity wastes would place the waste very close to waste spectrum No. 2. The four spectra are summarized in Table 3.5.

3.4.3.5 Impact Measures

Impact measures calculated by NRC for the generation and processing of waste include cost for processing and treatment; occupational exposures incurred during processing and treatment; population exposures resulting from processing and treatment and energy use (e.g., gallons of fuel consumed during processing and treatment). The costs for waste processing change from spectra 1 to 4 due to the greater application of processing options such as incineration. Processing options also have an impact on transportation costs, (discussed in the next subsection), since the volume of waste requiring packaging and transport can change depending upon the processing option used. The details of the description and characterization of waste, processing options, cost and impact data, and development of waste spectra is set out in Appendices D and G.

3.5 WASTE TRANSPORTATION AND PACKAGING

In addition to those generating the waste, there are a number of firms which supply intermediate services between the waste generator and disposal facility. These firms supply packaging for waste, assist in preparation of waste shipments, transport waste to disposal facilities and in some cases carry out waste processing and treatment operations at generator facilities.

Important to transportation is the size and type of packaging used for various types of waste; the type of transport vehicles and shielded overpacks used for transportation; miles travelled; and the degree of care involved in transportation and handling of waste during loading, unloading and emplacement at a

Table 3.5 Summary Description of Waste Spectra

Waste Spectrum 1

This spectrum assumes a continuation of existing and some past waste management practices. Some of the LWR wastes--namely P-CONCLIQ, B-CONCLIQ, and L-DECONRS waste streams--are solidified. However, no processing is done on organics, combustible wastes, or streams containing chelating agents. LWR resins and filter sludges are assumed to be shipped to disposal sites in a dewatered form. LWR concentrated liquids are assumed to be concentrated in accordance with current practices, and are solidified with various media designated as solidification scenario A. No special effort is made to compact trash. Institutional waste streams are shipped to disposal sites after they are packaged with currently utilized absorbent materials. Resins from LWR decontamination operations (L-DECONRS stream) are solidified in a media with highly improved characteristics (solidification scenario C).

Waste Spectrum 2

This spectrum assumes that LWR process wastes are solidified using improved solidification techniques (solidification scenario B). LWR concentrated liquids are additionally reduced in volume through an evaporator/crystallizer. All LWR concentrated liquids are evaporated in 50 weight percent solids, and all LWR process wastes are solidified using solidification scenario B procedures. In the case of cartridge filters, the solidification agent fills voids in the packaged waste but does not increase the volume. Liquid scintillation vials are crushed at large facilties and packed in absorbent material. All compactible trash streams are compacted; P-COTRASH, B-COTRASH, F-COTRASH, I-COTRASH, N-SSTRASH, and L-LOTRASH streams are compacted at the source of generation; and I+COTRASH, N+SSTRACH, and N+LOTRASH streams are compacted at the disposal facility. Liquids from medical isotope production are solidified using solidification scenario C procedures.

Waste Spectrum 3

In this spectrum, LWR process wastes are solidified assuming that further improved waste solidification agents are used (solidification scenario c). LWR concentrated liquids are first evaporated to 50 weight percent solids. All possible incineration of combustible material (except LWR process wastes) is performed; some incineration is done at the source of generation (fuel cycle trash, LWR decontamination resins, institutional wastes from large facilities and industrial trash from large facilties) and some at the disposal site (institutional and industrial trash from small facilities). All incineration ash is solidified using solidification scenario C procedures.

Waste Spectrum 4

This spectrum assumes extreme volume reduction. All wastes amenable to evaporation or incineration with fluidized bed technology are calcined and solidified using solidification scenario C procedures; LWR process wastes, except cartridge filters, are calcined in addition to the streams incinerated in Spectrum 3. All noncompactible wastes are reduced in volume at the disposal site or at a central processing facility using a large hydraulic press. This spectrum represents the maximum volume reduction that can currently be practically achieved.

disposal facility. These latter aspects were considered together since the type of waste, its packaging size, radiation levels and other factors uniformly affect handling at the point of generation, during loading onto a transport vehicle, during transportation to the disposal site and during unloading and disposal operations at the disposal site.

3.5.1 Description of Services Provided

As discussed, several types of goods and services can be provided by various service organizations depending on individual generator needs, the composition of the waste, its volume and its frequency of generation. Transportation can be provided by common or contract carriers which pick up packaged waste at generator facilities and transport it to the point of disposal. In such cases, the carrier is providing only a transportation service and the shipper retains responsibility for the wastes until accepted at the disposal facility. Transportation can also be provided by the licensee generating the waste or by other private carriers which accept title to the waste upon receipt at a generator's facility. These firms are licensed by the NRC or an Agreement State for their possession of the waste and in some cases they provide other services such as supplying packaging, waste processing, and temporary storage.

For larger generators like nuclear power plants, these service activities generally consist of providing the necessary shipping containers, (e.g., shielded casks), transporting the waste to the disposal site, and in some cases, waste processing. Such large generators usually contract these services out to private firms specializing in the provision of such services. In these instances, the cask is usually leased on an as-needed basis and the truckloads of waste are transported directly from the generator to the disposal site. A return trip is normally required to return the empty shielded cask back to the generator to allow it to be refilled for the next shipment. Often, the rental of the cask and the actual transportation are performed by separate companies.

Smaller LLW generators such as educational institutions , hospitals, and many industries will use common, contract, or private carriers. In many cases, a firm collects the LLW from a number of small generators and transports it to a central, temporary storage facility. Here the wastes may be repackaged and consolidated until sufficient waste has been collected to make up a truckload. At this point, the wastes will be transported for disposal. Firms engaged in this collection and consolidation of waste are often referred to as "waste brokers" and can generate full truckloads with sufficient frequency so as to achieve much high equipment utilization rates and lower unit transport costs than smaller LLW generators can on their own.

The assumptions and organization of data regarding the type of packaging and services provided, transport vehicles used, frequency of shipments, and other data is described below. Further detail is set out in Appendices D and G.

3.5.2 Degree of Care Required in Handling the Waste and the Shielding Required During Transportation

Each waste stream contains different amounts of different radionuclides and thus emits different types of radiation at different levels. Also, depending on the package size and the amount of waste contained in a package, different waste packages have different surface radiation levels. The external radiation levels at the package surface affects the level of care that should be exercised during handling of the waste and the type of shielding that would be required during transportation to comply with existing DOT and NRC transportation regulations. To characterize the broad range in package surface radiation levels that would be presented by the various waste streams packaged in various packages, NRC established three categories to represent the level of care required to handle each waste stream based on the total activity and radiation emitted by each stream. These categories are denoted by:

- Those requiring regular care--i.e., those streams containing very little high energy gamma emitting radionuclides and thus very low external radiation levels;

- Those requiring extreme care--i.e., those streams containing large quantities of high energy gamma emitting radionuclides and thus very high external radiation levels; and

- Those streams in between the above and requiring special care--i.e., those streams containing some high-energy gamma emitting radionuclides and thus moderate external radiation levels.

Since the activity of individual waste streams can vary, NRC also estimated the fraction of each waste stream requiring a particular level of care based on the variation in activity. This would account for the normal variation expected in waste stream activity.

3.5.3 Type of Packaging Used

After determining the level of care, NRC also analyzed the different types of packaging that could be used for shipment and disposal of waste. Based on this analysis the packaging was generalized into 5 generic types of packaging as follows:

1. Large wooden boxes - 128 ft^3
2. Small wooden boxes - 16 ft^3
3. 55-gallon drums - 7.5 ft^3
4. Small liners - 50 ft^3
5. Large liners - 170 ft^3

NRC assumed, for purposes of this analysis, that "extreme care" wastes were only packaged in drums or liners which are remotely manipulated during loading and off-loading. "Regular" and "special" care wastes are assumed to be packaged in all 5 package types.

Finally, NRC determined the fractional use of each package type for each waste stream using available shipping and survey data.

3.5.4 Mode of Shipment

In the same way that there are a large number of package types that can be used for shipment and disposal of the waste, there are also a number of different shipment modes, vehicles and shielded overpaks that can be used to transport the waste to the disposal site. For purposes of this EIS, NRC conservatively assumed that all waste is transported to the disposal facility by truck (i.e., rail and barge transport are not used). NRC generalized the various types of transport vehicles and overpaks into 6 types:

1. Vans
2. Flatbed trailers
3. Shielded trailers
4. Large shielded casks
5. Small shielded casks
6. 1-drum shielded casks

Casks are assumed to be transported to the disposal facility on flatbed trailers.

Since the activity and packaging used for each waste stream varies, and also varies within each waste stream as noted above, NRC also determined the percentage use of different vehicles and overpaks for the transport of the various streams.

3.5.5 Impact Measures

Impact measures calculated by NRC for the packaging and transport of waste include cost, occupational exposures, population exposures and energy use. Cost was calculated including a mileage charge (and fuel surcharge), a cask rental charge, and an overweight shipment transportation charge. Energy use was calculated based on the total shipment miles, including empty cask return trips, and using an average fuel consumption rate of 6 miles/gallon. For the base case and alternatives analysis, transportation distance was not assumed to vary. Costs and impacts are calculated assuming an average distance of 400 miles from the point of waste generation to the waste disposal facility. Occupational and population exposures incurred during transportation were calculated based on total loaded miles and the number of loaded shipments (Return trips in which the vehicle was empty were excluded). Occupational exposures incurred during loading of the waste and during transportation are included together. The exposures were calculated based on the man-minutes required to load each package and the radiation field associated with each type of package handling environment. Occupational exposures were calculated for each waste care level, package type and shipment mode. Occupational exposures during unloading and disposal of the waste were also calculated based on the personnel time required to unload and dispose of the wastes and the assumed radiation fields associated with the handling environment that the workers are exposed to.

3.6 WASTE DISPOSAL

This section describes the affected environment made up of those owning and operating the disposal sites. It also describes the siting, licensing, design, operation, closure and postoperational activities of a reference base case LLW disposal facility.

The operators of LLW disposal sites offer the essential services of providing a licensed and controlled site where generators of LLW may dispose of their wastes. The sites are owned by the state or federal government. The facilities and procedures necessary to offer this service include the monitoring of transport vehicles and packages to verify compliance with established license conditions and regulations; off-loading, temporary storage and disposal of the wastes; and monitoring and surveillance of the disposed wastes throughout the operating lifetime of the site. Lease conditions between the operators and state landlords provide that states will assume reponsibility for the long-term control and surveillance of the sites after closure. The conditions also include provisions for the accrual of funds to pay for the state's long-term custodial responsibilities.

There are presently three operating, licensed commercial LLW disposal facilities. These are the Barnwell, South Carolina site operated by Chem-Nuclear Systems, Inc. and the Beatty, Nevada and Richland, Washington sites operated by U.S. Ecology, Inc. All three of the above sites are located in Agreement States and are sited on state-owned land, except the Richland site. In this case the site is located on federally-owned land that has been leased to the state of Washington. As noted earlier in Chapter 1, three other licensed, commercial LLW sites exist which are not currently operating. These are the Sheffield, Illinois; Maxey Flats, Kentucky; and West Valley, New York sites. The first two sites were operated by the Nuclear Engineering Company and the last was operated by Nuclear Fuel Services, Inc., a subsidiary of the Getty Oil Company.

Both LLW site licensees offer similar onsite services concerning the disposal of LLW. These include explicit criteria concerning the types of wastes acceptable for burial, as well as specifications for solidification agents permitted, packaging requirements and permissible activity levels. They survey incoming shipments for compliance with license requirements and DOT transportation and packaging criteria. Also, wastes may be segregated by type and activity level to increase safety and operational efficiency. Transportation services and shielded shipping casks for lease to LLW generators that produce wastes with higher activity levels may also be provided.

3.6.1 Characterization of a Reference Base Case LLW Disposal Facility for Purposes of EIS Analysis

To help provide conservative bounds to the potential costs and impacts of waste disposal, NRC characterized a reference LLW disposal facility that is assumed to be sited in a humid eastern environment. NRC staff anticipates that over the next 20 years, over three-quarters of the waste generated in the United States will be generated in humid environments, i.e., in the eastern and humid midwestern sections of the country. Regional disposal of waste

therefore implies that most of the waste generated in humid environments would also be disposed in humid environments. Potential ground-water impacts (and actions required to protect ground water) at a humid site are generally expected to be greater than those at an arid area. Some of the conditions at an eastern humid site which would indicate this include the relatively higher annual precipitation, shallower depths to ground water, and relatively shorter distances from the disposed waste to the point of ground-water discharge into surface streams.

The reference facility is sized to accept a relatively large quantity of waste--i.e., 50,000 m^3 of waste per year over a 20-year operating life, or a total volume of one million m^3. This corresponds to approximately one-quarter of the total volume of LLW projected in the United States to the year 2000. Disposal of one million m^3 of waste in the reference facility will require about 150 acres of land, which corresponds to an approximate upper bound of the land area of current commercial disposal facilities.

The site for the facility minimally meets all of the site suitability requirements set out in Chapter 5. The facility is also assumed to be operated in compliance with minimum radiation safety practices required by provisions of 10 CFR Part 20 (see Chapter 6). Although the facility is assumed to comply with the NRC Branch Technical Position on Site Closure and Stabilization (See Appendix I), no special effort is, however, assumed to be made during operations at the reference facility regarding the form of waste or design and operational practices to ensure long-term site stability. Several design and operational improvements directed at stability that have been instituted at some existing sites have not been assumed for the base case site, (e.g., vibratory compaction of backfill material). This has been done to establish a base case level of long-term costs and radiological impacts against which measures to improve site performance, achieve greater site stability, minimize radiological impacts, and to ensure adequate funding can be assessed. Figure 3.1 describes the life cycle of a typical disposal facility. Further information regarding design, operation, and closure of the facility is set out below. The details are described in Appendix E.

3.6.2 Facility Design

A conceptual layout of the reference disposal facility is illustrated in Figures 3.2 and 3.3. As shown in the figures, the disposal facility is divided into two basic areas: a "restricted area" and an "administration area."

The entire site is surrounded by a 2.4 m (8 ft) high chain-link fence topped with three strands of barbed wire. A 2.4 m high fence also separates the administration area from the restricted area. Access to the disposal site is via a state highway running close to the site from which two short gravel roads lead onto the disposal facility. Access to the restricted area is controlled by security check points near the gates in the fence separating the administration area and the restricted area.

Figure 3.1 Life Cycle of a Typical Near-Surface Disposal Facility

Number of Years	Activity	Description
1-2 Years	Site Selection and Characterization.	Site selection and characterization activities are carried out by the applicant in coordination with NRC, and state and local government. A preferred site is selected, and the site characterized in detail. A license application is prepared which includes a preliminary closure plan, environmental report, arrangements for government ownership of the land, lease arrangements for use of the site, and financial arrangements to cover the costs of closure and postclosure activities.
1-2 Years	Preoperational Licensing	The application is submitted to NRC (including a license fee) and docketed. A notice of receipt of the application is published in the Federal Register and an opportunity for requesting hearings is provided. State and local government officials are notified. An analysis of the application is carried out by the NRC licensing staff including preparation of an environmental impact statement. If no hearings are requested and upon a satisfactory licensing finding, NRC takes action to issue the license. A Notice of Issuance is published in the Federal Register and state and local government officials are notified. If hearings are requested, hearings are held including any Commission reviews and appeals. Upon resolution of all hearings and appeals and upon a satisfactory finding, NRC issues the license, publishes notices and notifies state and local governmental officials.

Figure 3.1 (Continued)

Number of Years	Activity	Description
20-40 Years	Construction and Active Disposal Operations	Upon issuance, the operator begins operations to construct the facility and to receive and disposal of waste. On a periodic basis--about every 5 years, or as stated in the license--NRC reviews the licensee's program including the preliminary site closure plan, financial arrangements for closure and post-closure activities, and continued assessment of environmental impacts.
1-2 Years	Site Closure and Stabilization	During the operating phase, the site is generally stabilized as it is filled (e.g., trench caps are put in place). At closure, final site stabilization activities are carried out. Facilities not needed for postclosure activities are decontaminated and dismantled. Costs for closure are provided by financial arrangements of the operator. Upon satisfactory closure, NRC terminates the license and control over the site reverts back to the government landowner.
100 Years	Institutional Control	The government landowner carries out custodial care of the site which includes continued government ownership and control of the site; carrying out activities such as posting, maintaining site security, monitoring of the environment, and carrying out any maintenance activities such as correction of subsidence depressions in trench covers due to consolidation of the waste. The terms and conditions of the lease and financial arrangements between operator and owner provide funds to cover the cost of these activities.

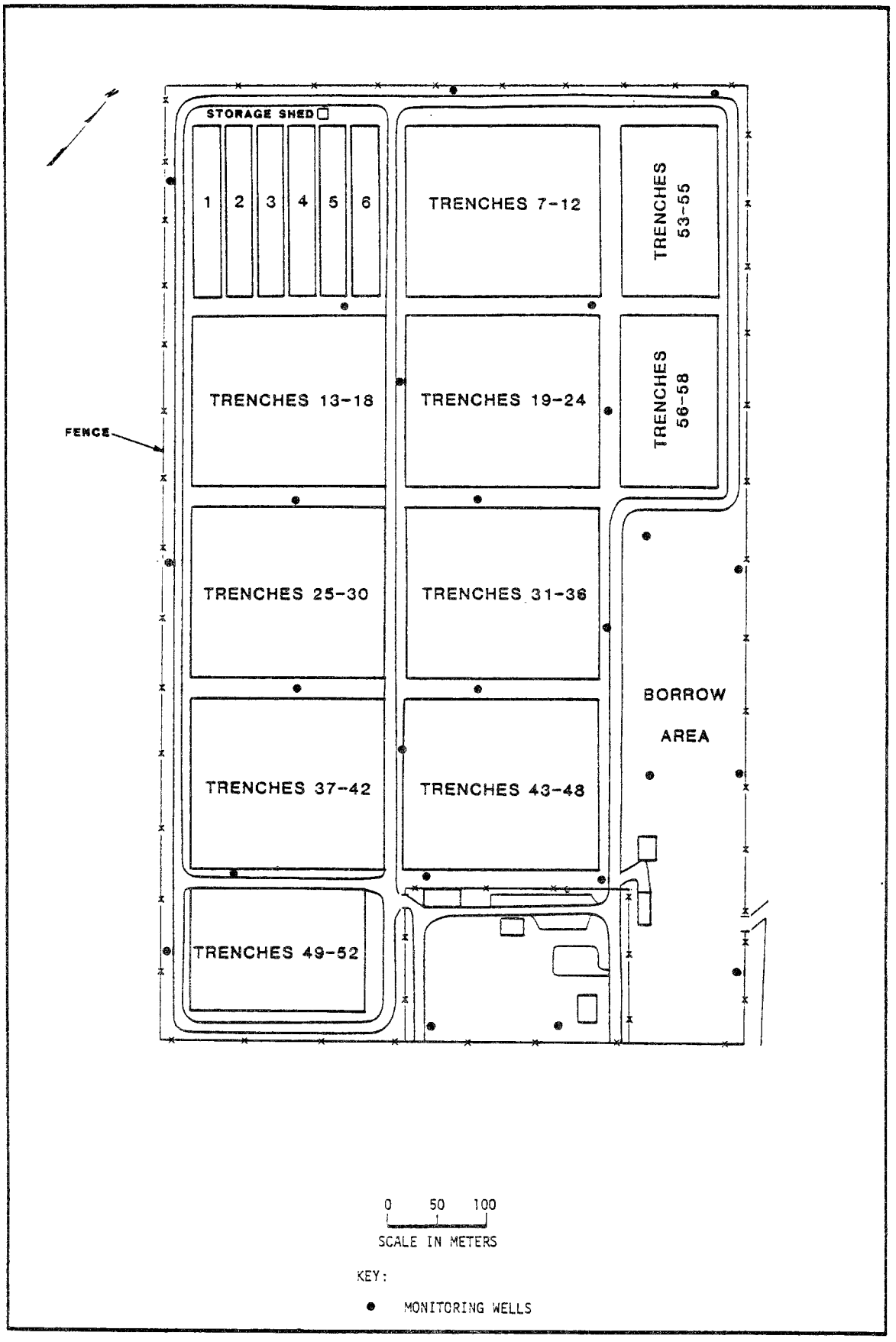

Figure 3.2 Conceptual Disposal Facility Layout

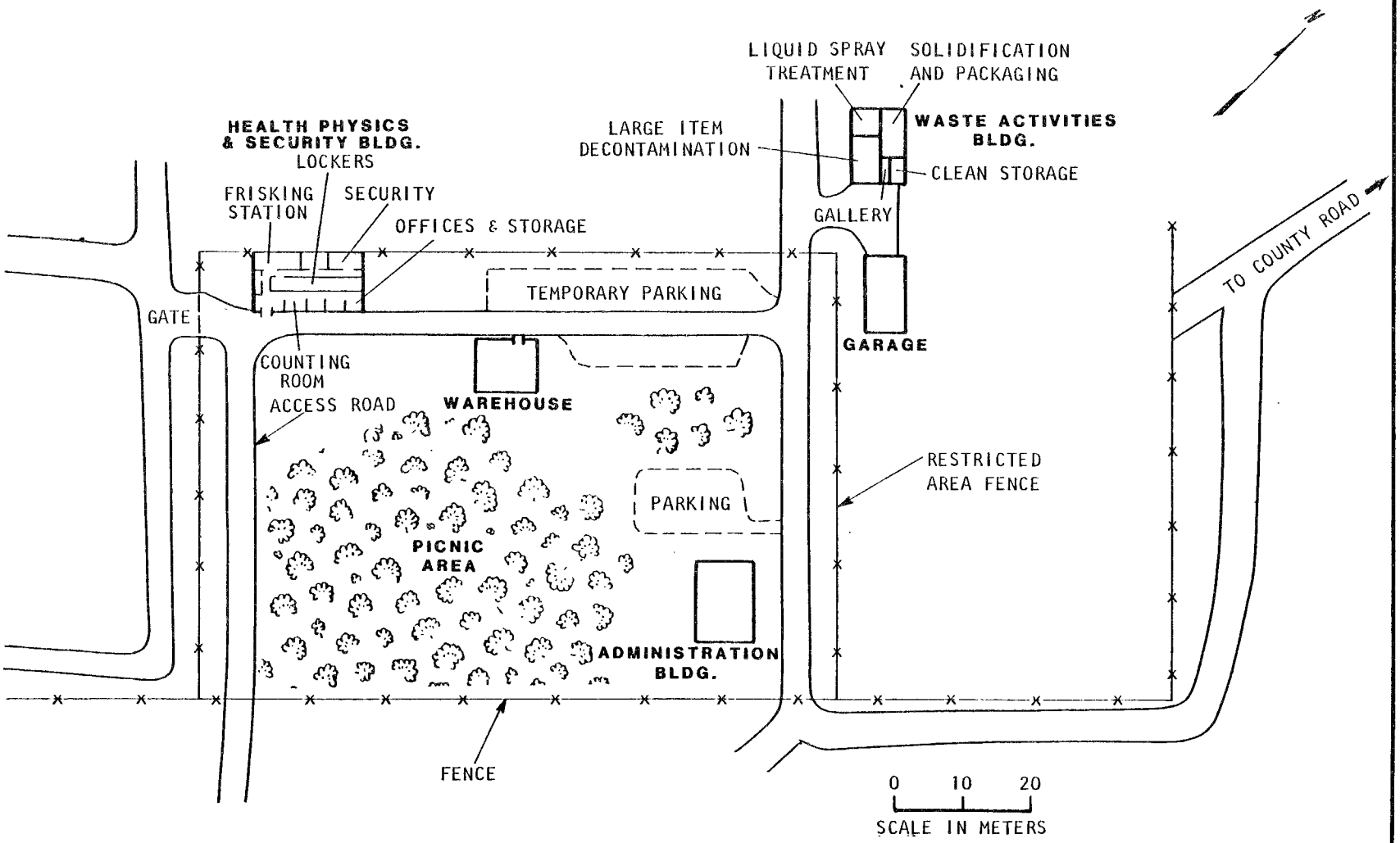

Figure 3.3 Conceptual Layout of Support Facilities

The disposal area at the reference facility includes 58 disposal trenches with average approximate dimensions of 180 m (591 ft) long, 30 m (100 ft) wide, and 8 m (26 ft) deep (see Figure 3.4). The rather large trench sizes assumed are representative of recent trends at existing disposal sites. A trench wall slope of 1 horizontal to 4 vertical (1:4) is assumed and the trenches are assumed to be separated by 3 m thick walls.

As a trench is constructed, the locations of the four corners of the trench are surveyed and referenced to a bench mark. An approximate one degree slope is provided in the bottom of a trench from end to end and from one side towards a 0.6 m x 0.6 m (2 ft x 2 ft) gravel filled French drain. The French drain runs the entire length on the lower elevation side to provide for collection of any liquid drainage that might occur. A gravel-filled sump is located at the low corner of the trench. Each trench is also equipped with a minimum of three 0.15 m (6 in) diameter polyvinyl chloride (PVC) standpipes located within the French drain and standing along the sidewalls of the trench.

Support facilities and structures include: (1) an administration building, (2) a health physics/security building, (3) a warehouse, (4) a garage, (5) a waste activities building, and (6) a storage shed. All structures at the site are one-story metallic structures on concrete pad foundations.

3.6.3 Facility Operations

The disposal facility is assumed to be operated for profit by a small corporation which is engaged in other nuclear-related business activities in addition to operating the disposal facility. Overall control of radiation health and safety at the corporate level is under the control of the senior radiation safety officer, who is responsible for conducting periodic reviews of site operations for compliance with health and safety regulations and license conditions, including periodic site inspections and audits. Operations at the disposal site are under the overall direction of a site manager and assistant site manager and have been divided into eight categories: the receipt, inspection, handling, storage, and disposal of waste; radiation and contamination control; site groundskeeping and maintenance; radiation safety and contamination control; environmental monitoring; security; recordkeeping and reporting; and quality assurance.

3.6.3.1 Waste Receipt and Inspection

Shipments of radioactive waste arrive by truck and are processed onto the site on a first-come, first-served basis. Accompanying the shipments are manifest documents--termed radioactive shipment records (RSRs)--which describe the content of the shipment. (An example of an RSR used at one disposal site is included in Appendix E.) Arriving shipments are inspected for compliance with applicable federal regulations and waste acceptance criteria established as conditions in the disposal site license.

Applicable federal regulations include those promulgated by NRC and DOT regarding waste packaging requirements, labelling requirements, vehicle placarding requirements, and allowable direct radiation and removable contamination levels at an accessible surface of transport vehicles.

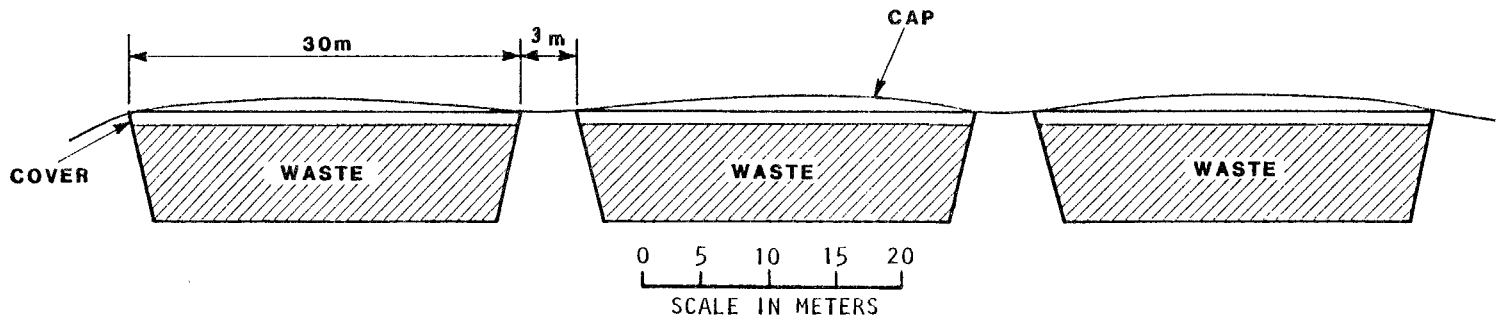

TYPICAL TRENCH CROSS-SECTION

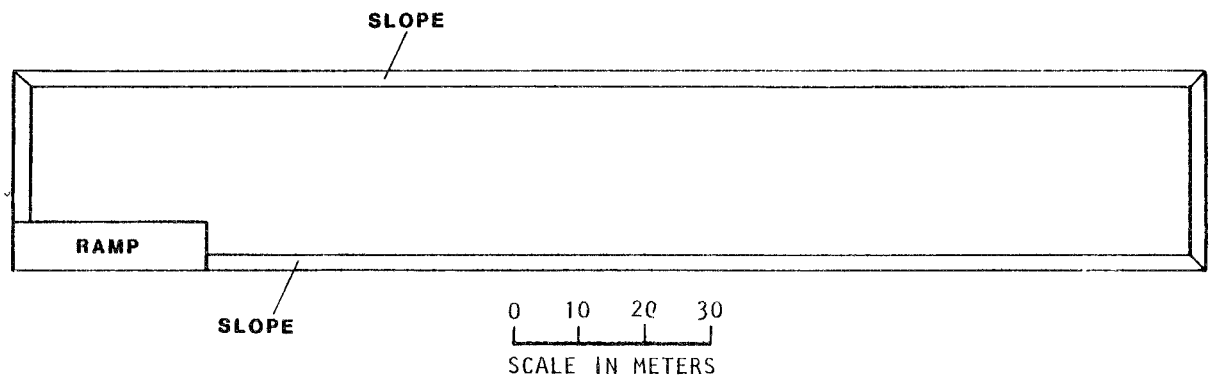

PLAN VIEW OF TYPICAL TRENCH

Figure 3.4 Details of Typical Disposal Trench

Shipments found to be in compliance with federal regulations and license conditions proceed into the disposal area for unloading. Depending upon license conditions, damaged or leaking waste containers may be overpacked or repackaged, and either accepted for disposal or returned to the sender. Activities such as overpacking and solidification are performed at the waste activities facility.

3.6.3.2 Waste Storage

Generally waste received at the site is disposed of within a few days. Waste that must be temporarily stored is generally left in transport vehicles or in temporary onsite storage areas.

3.6.3.3 Waste Disposal

Waste is randomly emplaced in the trench, sometimes using cranes and forklifts, and backfilled with dirt removed during trench excavation. Random waste emplacement results in a trench volume use efficiency of about 50 percent. Waste is not allowed to extend more than 100 feet beyond the backfilled portion of the trench. Backfill operations also commence if radiation readings greater than 100 mR/hr are recorded at the trench boundary, and continue until radiation levels are reduced below 100 mR/hr. Disposal commences at the high end of the trench and works down towards the lower end to prevent waste packages from being placed in water. Rainwater falling within the open trench drains away to the lower end of the trench where it can be removed.

Waste is emplaced to within one meter of the top of the trench, Earthen fill is then backfilled into the trench until the trench cover approximately corresponds to the original grade of the site surface. A one-meter thick cap composed of originally excavated soils is then placed upon the backfill and is mounded. No special compaction is performed on the fill and clay caps other than that provided by heavy earth moving equipment driven over the top of the cap. The cap is then covered with natural overburden material as necessary to provide good drainage characteristics and according to the final contours planned for the site surface. The overburden is reseeded to promote growth of a short-rooted grass cover.

Following trench capping, the disposal trenches are each marked with a monument which is inscribed with the following information:

- A trench identification number;
- Total trench activity of byproduct material in curies, and source and special nuclear material in grams;
- Date of completion of disposal into the trench; and
- Volume of waste in the trench.

In addition, each of the four top corners of the disposal trench are marked with a marker stone.

During waste handling and disposal, operations are monitored to ensure radiation safety. After the transport vehicle is unloaded it is again surveyed for contamination and decontaminated, as necessary, prior to leaving the restricted area. The results of the survey are recorded on the accompanying RSR.

3.6.3.4 Site Groundskeeping and Maintenance

Groundskeeping includes both the upkeep of grounds and the maintenance of external building surfaces. The purpose of groundskeeping is to promote site integrity by maintaining proper contour and soil conservation practices, by properly maintaining external structures and site systems, and by overseeing closed burial trenches in an efficient manner. Groundskeeping activities include countouring of the ground surface, emplacement of a soil cover material such as grass, fertilizing, mowing, and site drainage.

A site maintenance program entails routine inspection of site surfaces and fences for trench settlement, gullying, damage and debris. Repairs are made as necessary.

An important part of the reference site groundskeeping and maintenance program is surface water management. A surface water management program is site-specific (i.e., dependent on each site's topography, amount of rainfall, etc.), but its overall purpose is to divert surface water resulting from precipitation away from open trenches and to allow the surface water to flow offsite in a manner which will minimize erosion.

3.6.3.5 Site Safety, Radiation and Contamination Control

A program of site safety, radiation and contamination control is carried out at the site in compliance with existing standards in 10 CFR Part 20. It consists of 4 major activities:

- personnel radiation monitoring, including use of personnel monitoring devices, periodic internal monitoring, and administrative controls to ensure radiological safety;
- site radiation and contamination control, including routine radiological surveys to minimize the potential for spread of contamination or unnecessary exposure to radiation;
- abnormal or emergency procedures to quickly and safely handle abnormal occurrences or site emergencies; and
- personnel training and instruction in the hazards and controls of radioactive materials commensurate with the workers's duties and responsibilities for handling materials, and with the extent of anticipated worker exposure.

Monitoring devices are worn by all site personnel who may become occupationally exposed to ionizing radiation. A long-term record of cumulative personnel

exposures is maintained through the use of film or thermoluminescent dosimeter (TLD) badges. These are replaced, analyzed, and the resulting exposures reviewed and recorded on a periodic basis (usually on a monthly or quarterly schedule). Monitoring badges are replaced and analyzed whenever there is reason to believe that an employee may have received an unusually high radiation dose. Pocket dosimeters are also worn by site personnel and are used to provide an indication of radiation exposures over shorter time periods. These basic monitoring devices may, depending upon the circumstances, be supplemented by additional equipment such as electronic dose ratemeters, finger or wrist monitoring badges, or/and continuous air samplers.

3.6.3.6 Security

The site security program is needed both for radiation health and safety considerations as well as to protect the many thousands of dollars worth of equipment, buildings, and facilities located onsite. The security program at the base case facility is assumed to include the following:

- Full-time security personnel and a security training program;
- Controlled access and exit from site areas including fencing and lighting, material gate passes, badge control, personnel and vehicle search procedures, and lock and key control;
- Radio and telephone communication ability with emergency and law enforcement agencies;
- Identification badges and dosimetry for site employees and visitors; and
- Procedures for notifying site personnel and local authorities in the event of an emergency in compliance with federal and state regulations and conditions.

3.6.3.7 Recordkeeping and Reporting

A number of records are assumed to be maintained at the site to cover the areas required by NRC regulations, operational controls, and for future use. Records which are assumed to be maintained at the facility include:

- Personnel exposures;
- Waste receipt and disposal records;
- Personnel training records;
- Records from the QA program;
- Environmental monitoring data;
- Operating procedures; and
- Records of site surveillance and monitoring.

3.6.3.8 Quality Assurance

The quality assurance (QA) program at the site provides quality control and training support to the disposal site operations. The QA program includes the following areas:

- personnel monitoring;
- training;
- emergency drills and equipment;
- contamination control;
- working procedures;
- site maintenance;
- site groundskeeping;
- waste receipt, inspection, storage, and disposal;
- radiation instrument care and calibration;
- environmental monitoring;
- security;
- construction of disposal trenches;
- closure and stabilization; and
- recordkeeping

3.6.4 Facility Closure and Long-Term Site Control

Final closure is assumed to require approximately one to two years and involves dismantling and decontamination of site buildings, disposal of wastes produced during dismantlement and decontamination operations, and final site seeding and contouring. The final disposal trenches are filled, capped, graded, and seeded with a grass cover. The trench covers are left mounded. The licensee also makes a final survey of the disposal area to make sure direct radiation levels are at essentially background levels.

Following closure, the disposal license is terminated and control of the site is transferred to the site owner. For this EIS, the site owner is assumed to be a state agency which carries out an active institutional control program of surveillance, monitoring and maintenance for 100 years. Activities which take place during the institutional control period include site inspection, maintenance and site monitoring. Due to the compressible nature of much of the

wastes disposed of at the base case site and limited compaction during operations, a high degree of subsidence and slumping problems occur at the site. Base case site maintenance is, therefore, expected to be significant. The maintenance activities required during this time period mainly involve repair of slumping, subsidence and other disposal trench instability problems. During this phase, environmental surveillance and monitoring of the disposal facility continues.

3.6.5 Reference Disposal Facility Costs

Cost estimates for capital outlay, operational activities, and postoperational activities are provided in this section as a basis for comparison with the costs of alternatives. A summary of the three major components of the costs for reference facility capital outlay, operations, and postoperations are detailed in Table 3.6.

The capital outlay expended by the disposal company includes the costs of site selection, environmental impact studies, obtaining licenses and permits, the purchase price of the acquired land, road and building construction, engineering design fees, and peripheral systems such as fencing, lighting, and monitoring system components. The engineering design fees total 10 percent of the capital construction costs. The acquired 200 acres are assumed to be purchased at a price of $1200/acre. The site buildings are constructed at costs ranging from $10/ft^2$ (storage shed) to $50/ft^2$ (waste activities building) with an average building cost of $36/ft^2$.

The operational costs include the cost of trench construction, equipment leasing, operation and maintenance costs for the equipment, payroll, and monitoring services. The elements of trench construction include excavation, sump and standpipe construction, French drain installation, backfilling, compacting, land clearing and grubbing, and revegetation (seeding and fertilizing). All equipment is assumed to be leased during the 20 years of operation. The annual payroll for this disposal company is $1.13 million for the 70 employees. All radiochemical monitoring analyses are performed by a subcontractor and these costs are included in operations.

The cost of postoperational activities include closure, stabilization and long-term care. The closure and stabilization program for the reference site is similar to the "minimum plan" for the humid eastern site described in NUREG/CR-0570 (See Appendix Q). The minimum plan costs approximately $1 million.

The institutional control or long-term care program for the reference site is carried out over a 100-year period and includes labor, material, and equipment costs. During the first (ten) years of the active insitutional control period, the annual costs of care are at their highest. As the site matures, the required costs diminish. The annual long-term costs for years zero through 10 (0-10), 11 through twenty-five (11-25), and twenty-six through one hundred (26-100) are $440 thousand, $302 thousand, and $150 thousand, respectively. The types of activities which are carried out during the long-term care program

Table 3.6 Total Reference Site Costs

Direct Capital Costs (preconstruction and construction)	(1980$)
1. Site selection	500,000
2. Environmental impact studies	600,000
3. NRC licensing fees	325,000
4. Other licenses and permits	250,000
5. Land acquisition (200 acres @ $1200/acre)	240,000
6. Corporate administration	1,625,250
7. Construction administration	450,450
8. Legal fees	1,000,000
9. Road construction	200,000
10. Initial land preparation (40 acres @ $1145/acre)	45,800
11. Office and other miscellaneous equipment	400,000
12. Building construction	1,173,250
13. Utilities and supplies during construction	175,000
14. Peripheral systems (fencing, lighting, utilities installation, telephone, etc.	300,000
15. Engineering and design (10% of items 9, 12 and 14)	167,300
Total:	7,452,050

Indirect Capital Costs	Percentage of Direct Costs
Interest during construction	33%
Contingency	30%
Other Costs (insurance, sales tax)	10%
Total:	73%
Annual fixed capital charge rate for 20 years	25%
Assumed profit margin	20%

TOTAL CAPITAL COSTS

Direct costs x indirect costs x
annual fixed charge x profit

7,452,050 x 1.73 x 0.25 x 20 x 1.20 = 77,352,300

Table 3.6 (Continued)

Direct operational costs over 20 years	
1. Operations and maintenance	4,626,500
2. Disposal trench materials	124,200
3. Heavy equipment	12,228,000
4. Payroll:	
Base	22,560,000
Fringe	2,256,000
Overhead	12,408,000
5. Corporate administration (300k/yr)	6,000,000
6. Legal fees (150k/yr)	3,000,000
7. Environmental monitoring	534,000
8. Regulatory costs	1,138,000
9. Consumables (utilities, fuel, etc. - 200k/yr)	4,000,000
Total:	68,875,000
Indirect operational costs	30%
Assumed profit margin	20%
TOTAL OPERATIONAL COSTS	
Operational costs x indirect costs x profit 68,875,000 x 1.30 x 1.20 =	107,445,000
Postoperational Costs*	
1. Closure and stabilization (Cost over 20 years including inflation and surety)	3,640,000
3. Institutional Control - 100 Years	34,600,000
TOTAL POSTOPERATIONAL COSTS	38,240,000
TOTAL REFERENCE SITE COSTS	
Total Capital Costs plus Total Operational Costs plus Total Postoperational Costs	223,037,300
UNIT DISPOSAL COSTS	
Total reference site costs (223,037,300) / Total volume of waste over 20 year operation period (10^6 m^3) =	223/m^3 ($6.31/$ft^3$)

*Postoperational costs have been calculated based on a 9% inflation rate and 10% interest rate to reflect the actual costs to customers in 1980.

include erosion repair, vegetation management, subsidence repair, site access and drainage maintenance, surveillance and monitoring.

3.7 ALTERNATIVE WASTE DISPOSAL OPTIONS

NRC also analyzed a range in site characteristics and methods of design and operation that could be applied in the near-surface disposal of LLW. Some of the variations included differences in environmental and site parameters. Others included the specific methods used for the design and construction of the disposal facility including the method of disposal (e.g., trench with natural soil walls, trench with concrete walls), type of cover (e.g., soil, concrete) and whether special engineering designs were used for the disposal of particular wastes (e.g., slit trenches, caissons and tubes filled with concrete). Others included the procedures used for operation and placement of the waste including whether the waste was randomly dumped or neatly stacked, segregation of particular wastes due to unique characteristics, type of backfill, and stabilization and closure measures. Other aspects that also had to be considered were how much care a particular disposal facility might require after closure, and how long active institutional controls would be in effect at the facility.

3.7.1 Grouping of Alternatives

NRC generalized the various parameters which could be grouped to describe alternative site environments, methods of design, operation and closure, and postoperational institutional control activities into 13 categories as follows:

1. Region - The region specifies the geographic location of the disposal facility. (e.g., northeast, southeast) and as such determines all of the environmental properties that will be used in the analysis. Four regions were selected (Northeast, Southeast, Midwest, and West) Environmental properties common to each were selected for use in the analyses.

2. Design - Two principal design options are considered; use of a "regular" trench dug in the soil and use of a concrete walled trench.

3. Cover - Three principal cover designs are considered: thin, denoted by 1 meter of cover below grade and 1 meter of cover above grade; thick, denoted by 1 meter of cover below grade and 2 meters of compacted clay cover above grade, and intruder barrier, denoted by a 5-meter thick above grade highly engineered cover.

4. Emplacement Method - Three emplacement alternatives are considered:

   - Random, which simply involves dumping the waste directly into the disposal cell (a subset of this case is use of a highly permeable backfill);

   - Stacked, which involves stacking waste containers in neat piles (again, a subset of this case is use of a highly permeable backfill); and

- o Decontainerized which involves removing wastes from containers before disposal. In this case, structurally stable wastes in containers are randomly disposed and other low activity structurally unstable wastes are removed from their containers for disposal.

5. Layering - Layering involves the placement of selected higher activity waste streams on the bottom of disposal cells.

6. Segregation - Segregation involves the segregation and disposal in separate disposal cells of compressible wastes and those containing organic chemicals or radionuclide complexing chemicals.

7. Grouting - Grouting involves the use of concrete as a backfill material in place of natural soil.

8. Hot Waste Facility - A hot waste facility is a specialized disposal cell that would be used for higher activity wastes.

9. Stabilization - Stabilization denotes the extent to which disposal units are stabilized during operations, and during and after closure.

Three stabilization measures are considered:

- o A program in which no special compaction procedures are used except for the weight of heavy equipment;
- o A program in which improved compaction techniques such as sheepsfoot rollers and vibratory compaction are used; and
- o A program involving dynamic compaction or similar extreme measures.

10. Closure - Two types of actions implemented during the closure period are considered. One involves the application of standard practices such as dismantlement and decontamination of site buildings, disposal of any wastes generated, final contouring of the site, revegetation, final radiation surveys and other actions as set out in the NRC Branch Technical Position on Site Closure and Stabilization. The second involves the application of more extreme measures (in addition to the regular measure discussed above) including stripping of disposal unit covers, compaction using sheepsfoot rollers or similar measures, backfilling, recovering and revegetation of covers.

11. Care Level - Care level refers to the amount of active maintenance that will have to be carried out during the active institutional control period based on the design and operational procedures used at the facility. Three levels of care are considered:

- Routine surveillance and minor maintenance;
- Routine surveillance with some active maintenance such as periodic cover restabilization; and
- Major stabilization and remedial actions such as active trench pumping and leachate treatment programs.

12. Postoperational Period - The postoperational period denotes the time between cessation of active disposal operation to assumption of control by the site owner. It includes the time required to close the site and any period of observation before assumption of control by the site owner.

13. Active Institutional Control Period - This period is the time between transfer of control of the site to the site owner and the time at which institutional controls are assumed to cease.

3.7.2 Impact Measures

Impact measures calculated by NRC for the disposal of waste include the costs for the design and operation of the disposal facility including a fixed return on investment; costs to close the facility and to care for it over the long term; energy use; land use and commitment; occupational exposures; and exposures to individuals and populations due to inadvertent contact with the disposed waste at a future time and due to long-term releases to the environment. These are discussed in further detail below.

3.8 IMPACT MEASURES USED AND METHOD OF CALCULATIONS

Impact measures can be grouped into two categories:

1. Benefits, consisting, for example, of the value of goods and services produced through the utilization of radioactive material that results in generation of the waste or the reduction in health and environmental hazards presented by the waste through application of a specific disposal technique; and

2. Costs, consisting for example, of the costs to dispose of the waste and the potential environmental and human health hazards created by the LLW.

Direct benefits to society from the generation of LLW are the value of the goods and services produced through the utilization of radioactive materials and include monetary and nonmonetary benefits. These goods and services encompass a wide range from consumer products (e.g., luminous wrist watches and smoke detectors) and energy (e.g., electricity from nuclear power plants) to less economically measureable goods (advances in scientific research activities) and services (health benefits from nuclear medicine procedures). Other benefits associated with the use of radioactive material would include the salaries of persons employed in the nuclear or radioisotope industry, and

local and regional socioeconomic benefits such as an increased tax base. Benefits to society and the natural environment derived from those involved in the disposal of waste and the regulation of these activities are the provision of goods and services for the safe disposal of radioactive waste and the reduction in potential environmental and human health hazards.

Direct costs to society would be the creation of the LLW and its attendant potential environmental and human health hazards and the short- and long-term financial, governmental, human and natural resources used to properly dispose of the waste. Persons will be exposed to the waste as it is being transported and after disposal through potential releases from the site. At any specific disposal site, the local ground water, biota and animal species will be affected by site operation. And, fuel will be consumed in transporting the waste to a disposal site and in powering equipment at the site involved in site operations. Finally, the cost for disposal of the waste will be reflected in the cost for goods and services provided by those generating the waste.

Thus, it is quite difficult to accurately assess the cost and benefit impacts on the many segments of the environment involved because many are nonmonetary (e.g., improved well-being due to improved diagnosis through nuclear medicine) and in many cases a small part of a much larger overall cost (e.g., that portion of electrical usage charges attributed to the disposal of LLW). It is equally difficult to quantify the impacts of application of the rule on the physical and local socioeconomic environment (e.g., ground water, ecology, local taxes) since the impacts can only be analyzed based upon a specific real site. Finally, given the rather large and diverse nature of the affected environment, a rather large number of potential factors can be identified which could be used to quantify environmental impacts. In this EIS, NRC has attempted to identify important segments of the environment (both direct and indirect) that lend themselves well to generic treatment, that can be easily quantified based upon existing information, and which provide a reasonable measure of the short- and long-term potential impacts that could be expected from implementation of a specific alternative course of action that might be set out as a requirement in the new regulation.

3.8.1 Impact Measures Used

NRC's overall goal is to assure protection of the public health and safety and environment. In considering radioactive waste disposal, this goal falls into two time frames: (1) protection of workers and the public during the short-term operational phase and, (2) protection of the public health and safety over the long term after operations cease. Each of the existing disposal sites was licensed on a case-by-case basis. As with other nuclear facilities, emphasis was placed on protection of the public health and safety focusing principally on operational safety and radioactivity releases and exposure of offsite individuals and populations. There was a tendency to focus on operational safety at the disposal sites with, perhaps, less attention given to the long-term performance of the disposal facility. Disposal facilities involve some quite different considerations than those applied to other nuclear facilities. At the end of their operating life, (e.g., 40 years) other nuclear facilities are decommissioned, decontaminated and released for unrestricted use. Disposal

facilities, however, although involving considerations of safety during its relatively short operating life (e.g., 20-40 years), are relied upon for significantly longer periods of time (e.g., several hundred years after waste emplacement) to perform their function of confining waste with reasonable assurance over the time the waste presents a significant potential hazard to the public health and safety.

Thus, safety must be assured during the short-term operational phase relating to onsite occupational exposures and exposure to individuals and populations offsite as well as over the long term relating to exposures to individuals and populations.

In addition, the long-term social commitment must be considered. For example, maintenance operations at some existing sites require an expenditure of manpower and money to maintain the site and to minimize impacts from potential offsite releases. Such "active" maintenance operations involve additional expenditures which were not foreseen nor planned at the time that the disposal facility was opened. They involve long-term social commitment in terms of manpower and money that was not planned for and which is difficult to assess in terms of how long such programs must be relied on to assure continued safety of the site. The function of an LLW disposal facility should be to assure that the public health and safety is protected without the need for long-term social commitment in the form of "active" maintenance programs at the sites.

Long-term social commitment is also important when considering future use of a disposal facility and intrusion. For example, governmental entities can continue to exercise active institutional control over a disposal facility after closure (i.e., continue to actively and physically control access to the site) for an indefinite time after closure. How long, however, should such controls last? If they last indefinitely, the long-term costs and social commitment of future generations would be very high. If they were not relied upon at all, the costs for disposal of low activity wastes would be very high. Thus, consideration of long-term social commitment is important such that institutional controls applied at a disposal facility are sufficiently long to allow most wastes to decay to acceptable levels yet not so long as to burden future generations.

Given the short- and long-term safety considerations, the potential exposure modes and need to consider social commitment, there are four basic performance objectives that should be achieved in the disposal of LLW:

1. Long-term protection of the intruder considering the need for long-term social commitment;

2. Long-term protection of the public from potential releases to the environment considering the need for long-term social commitment;

3. Short-term protection of workers and the public while the site is in operation; and

4. Long-term stability and elimination of the need for active maintenance.

The first two objectives point out the need for long-term stability and predictability in disposal facility performance as well as consideration of long-term social commitment. Potential long-term releases to the environment and potential exposure of an intruder should be accomplished in such a manner that major social commitment is not required and no undue burdens are placed on future generations. These, at the same time, need to be balanced with the costs for disposal to be borne by present generations based on a range of alternative approaches that can be followed to improve safety in disposal. Thus, the method of calculation developed and applied by NRC in this EIS calculates both short-term impacts that occur at the point of generation, during transport, and during disposal operations; and the long-term impacts that occur after the disposal facility closes. These can be divided into several impact evaluation factors as follows:

1. Short-term costs to a waste generator for processing, packaging, transport and disposal of the waste;

2. Short-term radiological impacts (occupational and public exposures) due to processing, packaging, transport, and disposal of waste;

3. Long-term costs to care for the site over the long term after operations cease;

4. Long-term radiological impacts (public exposures) due to disposal of the waste;

5. Energy consumed during processing, transport and disposal of the waste; and

6. Land committed for the disposal of waste.

Other potential impact measures such as man-hours expended and material requirements (e.g., clay, gravel, concrete, etc.) are implicitly included in the above measures. NRC also assumed that no land is permanently committed during waste processing and transportation activities. These impact measures can be grouped by the three principal phases of waste disposal discussed earlier, namely:

Waste Processing	Waste Transportation	Waste Disposal
Costs ($)	Costs ($)	Costs ($)
Occupational exposures (man-mrem)	Occupational exposures (man-mrem)	Occupational exposures (man-mrem)
Fuel use (gallons of fuel)	Fuel use (gallons of fuel)	Fuel use (gallons of fuel)
Population exposures (man-mrem)	Population exposures (man-mrem)	Exposure to individuals and populations (mrem and man-mrem)
		Land use (m^2)

Each of these are discussed in further detail below as a part of the description of the method of calculation used.

3.8.2 Method of Calculation

The various ways that a person can be exposed to radioactive waste may be divided into three principal categories:

1. Activities involving the processing and handling of the waste prior to disposal. This would include activities involved in the handling, processing, and packaging of the waste at its point of generation; transport of the waste from the point of generation to disposal; and activities at the disposal facility involving emplacement of the waste at the disposal facility (processing of waste at facilities other than the generating licensee's facility would also be included).

2. Man contacting the waste after disposal (i.e., intrusion into the disposal facility leading to exposure to disposed waste). This would include activities of man that would lead to his intruding into the disposal facility either purposefully (such as an archeologist in the future intentionally digging into the sites attempting to reclaim artifacts from the disposed waste) or inadvertently (such as an unknowing individual who might attempt to use the land for reasonable productive purposes in the future--e.g., farming or housing).

3. The waste entering one of several natural environmental pathways back to man (e.g., migration). This would include the potential leaching and transport of the waste through the ground water; intrusion and dispersion by plants and animals; long-term erosion of the site with eventual uncovering of the waste and surface water and air transport; and release of gaseous decomposition products from the waste containing radioactive species (e.g., tritiated methane gas).

The first mode involves primarily short-term considerations and the second and third, long-term considerations.

3.8.3 Waste Generation/Processing

Short-term impacts calculated at the point of waste generation include occupational exposures, population exposures, costs, and energy use. The impacts due to processing of the waste are described in this section. The occupational exposures involved with the handling of the waste during loading are described in the following section regarding transportation.

Waste processing options analyzed were divided into volume reduction processes such as compaction, evaporation and incineration; and volume increasing techniques such as solidification, addition of absorbent material and packaging.

NRC assumed that only incineration would result in the release of significant quantities of radioactivity to the environment and population exposures were calculated based upon fractional release rates for small (pathological) and

large (fluidized bed) incineratiors; whether the processing was done at the point of generation or at a central facility; and the local environment. Institutional facilities were assumed to be located in an urban environment and all others in a rural environment. Occupational exposures were calculated based upon the person-hours required to process the waste and the radiation field associated with the general work environment.

The amount of energy required to process the waste was also determined and is expressed in units of gallons of fuel consumed. Labor hours and costs for processing were also determined based upon published data.

The unit rates for costs, energy use, and labor hours assumed for the processes considered in this EIS, compaction, evaporation, incineration and solidification are summarized in Table 3.7.

Table 3.7 Summary of Processing Unit Impact Rates

Process	Cost (1980 $)	Labor (hours)	Energy (g of fuel)	Units
Compaction				
Regular	335	15	4.6	Per m^3
Improved	503	15	4.6	of Input
Hydraulic Press	1,006	15	4.6	
Evaporation	690	4.42	56.3	Per m^3 of Input
Incineration				
Pathological	2,060	8	116	Per m^3
Fluidized Bed (small)	1,938	6.12	1.29	of Input
Fluidized Bed (large)	1,039	5.35	72	
Solidification				
Scenario A	1,200	17	47	Per m^3
Scenario B	1,700	14	39	of Output
Scenario C	1,900	12	33	

3.8.4 Waste Transportation

Impacts calculated during transportation of the waste include occupational exposures, population exposures, energy use and cost. Also included in this subsection because of similarities are the occupational exposures incurred during handling of the waste at the point of generation and at the disposal facility.

The occupational and population exposures incurred during transportation are calculated based on total loaded miles travelled and the number of loaded shipments (i.e., return trips when the vehicle is empty are excluded). The exposure rates used for occupational and population exposures incurred during transportation are summarized below:

	Population Doses (person-mrem)	Occupational Doses (person-mrem)
During transit per shipment mile	0.018	0.02
During stopover per shipment	2.0	2.0

The occupational exposure resulting from handling of the waste at the point of waste generation were calculated based on the man-minutes required to load each container and the radiation field associated with the level of care required to handle the container. Occupational exposures were also calculated for the handling of waste at the disposal facility during disposal based on the personnel time required for unloading and disposal and the radiation fields associated with the handling environment that the workers are exposed to.

Other impact measures calculated involved costs for transportation which include a mileage charge, fuel surcharge, cask use rental charge and the energy use calculated based on the total shipment miles traveled assuming an average fuel consumption rate of 6 miles per gallon.

3.8.5 Waste Disposal

Impacts calculated at the point of disposal include occupational exposures, population and individual exposures, costs for disposal, costs for long-term care, energy use and land use.

The calculation of land committed for waste disposal is based on the volume of waste disposal of, the method of waste emplacement and the particular design of the disposal facility.

Waste disposal costs may be divided into two types of costs--design and operation costs, and postoperational costs. Design and operation costs represent fees charged by the disposal facility operator to cover design and operation of the disposal facility, and to receive a fixed return on investment. These include capital costs (costs associated with siting, designing, licensing, and initial construction of the disposal facility) and operational costs (costs associated with receipt and disposal of waste, as well as construction of disposal cells).

Postoperational costs include costs for (1) facility closure, and (2) long-term care by the site owner. Included in the postoperational costs are costs associated with acquisition by the licensee of surety bonds, letters of credit, or other financial instruments which are used to provide assurance to the site owner that funding for closure and long-term care will be available.

Occupational exposures are calculated in two phases: the exposures to waste handlers who unload and dispose of the waste (discussed in the preceeding section) and occupational exposure of other site personnel performing routine operational and administrative functions not directly connected with waste handling. Occupational exposures, costs and energy consumption are related to the volume of waste disposed of, operational practices, and the design of the facility. Unit impact measures were calculated for the base case facility described in Appendix E and for the variations described in Appendix F. They are summarized in Table 3.8. The specific exposure pathways analyzed regarding disposal of the waste and the short- and long-term radiological impacts, and other costs of disposal are discussed in detail in Chapters 4, 5 and 6. Chapter 4 addresses exposure of an intruder, Chapter 5 addresses long-term environmental releases, and Chapter 6 addresses short-term releases during operations and processing of waste at a centralized regional processing facility.

The methodology calculates:

- o the occupational exposures and the exposures to the members of the public (individuals and population) resulting from the disposal of LLW;
- o the occupational and the population exposures resulting from the processing of the waste by the waste generators or by the operators of a centralized regional processing facility (assumed to be at the disposal site), and the transportation of the waste from the waste generators to the disposal site;
- o the costs and the energy use associated with processing, transportation, and disposal of LLW; and
- o the land area committed to disposal of LLW.

For waste processing purposes, population doses are limited to exposures due to airborne releases from waste incineration or calcination. For waste disposal, the calculational methodology determines the following exposures:

- o Ground-water migration
  - To an individual (an intruder) from a well located on the disposal facility following the end of the active institutional control period.
  - To an individual from a well located at the disposal facility site boundary.

Table 3.8 Unit Rates for Impact Measures

Activity	Cost (thousand 1980 $)	Occupational* Exposure (person-mrem)	Energy Use (thousand gallons)	Units**
Preoperational				
Reference Base Case	7,452	--	212	Lump Sum
Additive Alternatives†				
Walled Trench	594	--	--	Lump Sum
Stacking	226	--	--	Lump Sum
Segregation	1	--	--	Lump Sum
Layering	132	--	--	Lump Sum
Decontainerized Disposal	924	--	--	Lump Sum
Hot Waste Facility	260	--	--	Lump Sum
Grouting	55	--	--	Lump Sum
Intruder Barrier	281	--	--	Lump Sum
Extreme Stabilization	10	--	--	Lump Sum
Operational				
Reference Base Case				
Trench (-Cover)	2,341	300	200	Disposal Vol.
Regular Cover	1,420	2,400	100	Disposal Area
Other	63,696	1,000	200	Lump Sum
Additive Alternatives†				
Walled Trench	74,438	700	300	Disposal Vol.
Stacking	12,758	100	100	Total Waste Vol.
Segregation	3,888	100	30	Total Waste Vol.
Layering	15,400	-100	30	Vol. Disp. by Layer
Decontainerized Disposal	48,975	400	100	Vol. Disp. by Decon
Hot Waste Facility	176,979	-200	450	Vol. Disp. by HWF
Grouting	72,405	2,550	800	Grout Volume
Sand Backfill	3,270	--	185	Sand Volume
Cover Options				
Thick	15,524	2,400	150	Disposal Area
Intruder Barrier	103,854	2,400	300	Disposal Area
Moderate Stabilization	3,465	4,800	300	Disposal Area
Extreme Stabilization	33,345	4,800	600	Disposal Area

Table 3.8 (continued)

Activity	Cost (thousand 1980 $)	Occupational* Exposure (person-mrem)	Energy Use (thousand gallons)	Units**
Postoperational				
Closure Period				
Regular Closure	1,010	500††	15	Lump Sum
Extensive Closure	3,025	1,000	60	Lump Sum
Institutional Period#				
Low Care Level				
Years 1-10	150	--	2	Per Year
Years 11-25	63	--	2	Per Year
Years 26-100	51	--	2	Per Year
Medium Care Level				
Years 1-10	303	--	6	Per Year
Years 11-25	150	--	6	Per Year
Years 26-100	63	--	6	Per Year
High Care Level				
Years 1-10	440##	--	10	Per Year
Years 11-25	303	--	10	Per Year
Years 26-100	150	--	10	Per Year

*Occupational exposures associated with operations other than waste unloading and disposal.

**Lump sum items are assumed to be independent of the waste volume. Disposal volume dependency is for 1 million m^3 of disposal (not waste) volume; grout volume dependency is for 1 million m^3 of grout injected; sand volume dependency is for 1 million m^3 of sand backfill; disposal area dependency is for 1 million m^2 of trench cover area.

†Rates for alternatives are incremental rates in addition to the rates given for the reference system.

††Regular closure assumed to last 2 years, extensive closure is assumed to last four years. Both cases assume 5000 person-hours of field work per year in an average radiation field of 0.05 mR/hr.

#These costs are basic costs not considering inflation or interest. Details for complete calculation of the institutional period costs can be found in Appendix Q. The formulae given in Appendix Q are incorporated into the cost calculation procedure.

##To this cost, a contingency cost is added which depends on the soil conditions: $367,000 for medium-permeability soils; $168,000 for high-permeability soils; and, $1,007,000 for low-permeability soils.

- To a small population consuming water from a well located halfway between the facility and the hydrologic boundary (a steam).

- To a small population consuming water from the hydrologic boundary.

o Exposures to an inadvertent intruder or small group of intruders who at some point in the future may potentially:

- Construct a house on the site, or

- Live in the house and consume food grown on the site in contaminated soil.

o Exposures to a small population from:

- Airborne transport of radionuclides due to uncovering of the disposed waste by either a potential intruder or through erosion; or

- Waterborne transport of radionuclides due to uncovering of the disposed waste by either an intruder or through erosion.

o Exposures to individuals located offsite through airborne release of radionuclides due to an operational accident such as a dropped container or a fire.

The details on development and application of the calculational methodology are set out in Appendices G, H and Q.

Chapter 4

PRESENTATION AND ANALYSIS OF ALTERNATIVES-INTRUDER

4.1 INTRODUCTION

This chapter reviews the potential hazard presented by inadvertent human intrusion into disposed waste and methods which may be used to mitigate the hazard. Two general concentration-limited inadvertent intrusion scenarios are considered:

1. Excavation into disposed waste or construction of a house or building at the disposal facility; and

2. Living on and consuming food grown at the disposal facility.

As implied above, the first general intrusion scenario may be broken into two sub-scenarios, depending upon the length of time that exposure occurs.

A third inadvertent intrusion scenario, which involves consumption of water from a well drilled at the site, is considered in Chapter 5 since it relates to ground-water migration.

Four methods are addressed by which potential human intrusion impacts may be mitigated:

1. Controlling the disposal of specific waste streams;

2. Waste form and packaging;

3. Institutional controls; and

4. Use of engineered and/or natural barriers to intrusion.

Section 2 presents background information about intrusion and selection of the specific scenarios analyzed in this EIS. Section 3 analyzes inadvertent human intrusion presenting the impacts of the base case "no action" alternative and incremental changes in those impacts due to application of a range of alternative controls involving disposal of specific waste streams, waste form and packaging, institutional controls, and use of natural and engineered barriers. Sections 4 and 5 analyze development of a performance objective for protection of an inadvertent intruder leading to selection of a preferred performance objective. Section 6 reviews technical requirements derived from the analyses, and those involving codification of existing practice, that should be applied in the near-surface disposal of waste to ensure protection of the inadvertent intruder. For those requirements involving a change to existing practice, a range of alternatives is considered and the costs and impacts presented. In some cases, based on a balancing of costs and benefits, a specific prescriptive requirement is selected. In other cases, flexibility in meeting the requirement is maintained to allow for individual cost-benefit considerations.

4.2 BACKGROUND INFORMATION ON HUMAN INTRUSION

In determining performance objectives and technical criteria for near-surface radioactive waste disposal, one of the considerations is the potential for human intrusion into the disposed waste. That is, at some time after the disposal facility is closed, an individual or group of individuals may perform such activities as excavating through the disposal cell covers and into the disposed waste.

It is recognized that the possibility of human intrusion into a closed near-surface disposal facility is only hypothetical. Existing regulations require that near-surface disposal facilities be sited on land owned and under the control of either the federal government or the government of the state in which the facility is located. As part of this "institutional control," the site owner would restrict the types of activities that would be carried out at the facility. For example, the closed facility may be fenced and maintained under periodic surveillance. As another example, an individual or a corporation may be licensed by the state or federal government to carry out productive surface activities on the facility, with the provision that the licensee does not excavate into the disposed waste.

The concern is that at some time after the facility is closed, institutional controls may break down and an intrusion event may occur. The one or few individuals intruding into the facility would then be exposed, through direct contact, to any waste disturbed through the intrusion event. Such intrusion may also act to increase the potential for ground-water migration by increasing the infiltration of precipitation into the waste and it may also bring wastes to the surface where they may potentially be dispersed by wind or water. These actions may result in radiation doses to the surrounding population. However, the largest radiation exposures by far would be to the individual intruders themselves.

Given the potential for human intrusion and the possibility of human exposures from intrusion, NRC believes it is reasonable to estimate the magnitude of exposures that could be received by an intruder. If such potential exposures appear to be significant, then it would be reasonable to explore ways in which such potential exposures can be reduced. First, however, some estimate should be made of the types of activities that could be potentially carried out by an intruder and of the potential pathways for exposure.

4.2.1 Human Intrusion Exposure Pathways

Intrusion into disposed waste may be either deliberate or inadvertent. A deliberate intrusion event implies that the intruder knows of the potential hazard of the disposed waste but for some reason deliberately chooses to ignore the hazard. For example, the intruder could be seeking something of potential value in the disposed waste. This would appear to be an unlikely scenario, however. The disposal facility would be under the surveillance and control of the government and deliberate intrusion into the waste to try and retrieve something of value would be a criminal act. Therefore, in order to

preclude discovery, the intruder would want to perform his activities as quickly as possible. In addition, if it is assumed that the intruder chooses to deliberately ignore a known potential radiation hazard, then it must also be assumed that the intruder would want to minimize his potential exposures by minimizing the time spent in contact with the waste. However, intrusion would involve digging through a few meters (e.g., 2 to 4) of soil prior to contacting the waste, which would take time. Power machinery would probably be needed to excavate soil and waste packages, which would make the assumed intrusion event rather conspicuous. In addition, the intruder would not have any knowledge regarding where a potentially valuable article might be. This means that the intruder would have to spend a considerable amount of time in a hazardous environment in order to find something of possible value during which the chance of discovery would be great (and would increase the longer the time spent) and the potential profit small. If would therefore appear that intentional intrusion after something of value would not be a profitable undertaking, and most people would not take the risk. In any case, it would appear to be difficult to establish regulations designed to protect a future individual who recognizes a hazard but then chooses to ignore the hazard.

On the other hand, inadvertent intrusion implies that an individual or group of individuals intrude into the waste either accidently or without realizing that there is a potential hazard. The former case appears to be the most likely. For example, a person who is licensed to maintain the facility might have some reason to excavate on the facility ground (e.g., to install a monitoring device) and could possibly misjudge the locations of the disposal cells and accidently dig into disposed waste. In this case, the hazard would be immediately recognized (certainly within a few minutes) and minimal exposures would result. (It must be assumed that individuals licensed to maintain the facility would have a knowledge of radiation safety and would at least be equipped with radiation detection equipment such as survey meters and would know how to use them.)

More significant exposures could occur if the intruder does not realize at first that there is a potential hazard. This could occur if there is a breakdown in institutional controls and the site owner mistakenly releases the facility for unrestricted use. (This, however, is unlikely as discussed in Section 4.3.6.) Assuming that such a thing occurs, then there are many possible scenarios for human exposure. A rather extreme scenario would be one in which the waste is contacted for extended periods of time.

The potential for inadvertent intrusion into a closed waste disposal facility assuming a breakdown in institutional controls has been examined in detail in studies by a number of investigators, including Lawrence Livermore Laboratory (Ref. 1), Ford, Bacon, and Davis, Utah (Refs. 2, 3), the Utility Waste Management Group (Ref. 4), and the Department of Energy (Ref. 5). A summary of the scenarios examined by these investigators are listed in Table 4.1. All of the studies were performed as part of efforts to classify radioactive wastes for disposal.

As can be seen, the studies investigated a number of scenarios in which a potential inadvertent intruder could be exposed, including construction of

Table 4.1 Comparison of Intruder Exposure Scenarios

Ford, Bacon and Davis (Ref. 2 3)	Department of Energy** (Ref. 5)	Utility Waste Management Group (Ref. 4)
(1) Inhalation of contaminated dust from construction activities*	(1) Sheet erosion of waste into a stream, followed by either:† o consumption of contaminated H_2O; o use of water for irrigation; or o consumption of fish obtained from the stream	(1) Leaching of waste into a water course (2) Spillage of waste on the ground, which is carried into a water course (3) Inhalation of spilled waste
(2) Inhalation of contaminated dust by someone living on the disposal facility	(2) Ground-water migration of radionuclides to an aquifer, followed by either:† o consumption of contaminated H_2O;or o use of water for irrigation	(4) Inhalation of dust during excavation by an intruder (5) Consumption of contaminated dirt by child
(3) Consumption of contaminated water from an onsite well	(3) Retrieval of useful items by an artifact hunter	(6) Consumption of food grown in contaminated soil (7) Erosion of waste into water course
(4) Consumption of food grown on contaminated soil*	(4) Exposure of waste, followed by persons living on the disposal facility being exposed through inhalation of contaminated dust and consumption of food grown on contaminated soil*	(8) Inhalation of eroded waste (9) Direct gamma irradiation from 55-gallon drums (10) Direct gamma irradiation from the ground surface
(5) Direct gamma radiation exposure to a construction worker*		
(6) Ground-water transport of radionuclides to a river		
(7) Sheet erosion of waste to a river		

*Determined by the authors to be generally controlling.

**The authors also reviewed, but did not treat in detail, other pathways including movement of waste to the surface by plant (nonfood) uptake, movement of waste to the surface by burrowing animals, and severe events, such as flooding, meteor impact, or glacial action.

†Whichever subpathway is most restrictive.

houses on top of a disposal facility, consumption of food grown in contaminated soil, and consumption of water from a well drilled into the disposal facility. Although a number of scenarios were investigated, all scenarios were composed of only three pathways of human exposure--i.e., inhalation of radionuclides, consumption of radionuclides through water or food, and direct gamma exposure. The pathways were used singly or in combination to determine impacts. One researcher examined the potential impacts of someone (a child) eating contaminated soil directly (Ref. 4). Another researcher examined the potential impacts from someone potentially retrieving an artifact contaminated with transuranic radionuclides from a disposal facility and using the artifact for his own purposes (Ref. 5). (Inhalation exposures are assumed to occur either while excavating or while the artifact hunter polishes the artifact.)

To calculate impacts (concentration limits for disposal) all investigators assumed that intrusion events take place some hundreds of years following waste disposal, after institutional controls cease. That is, for the first few hundred years following waste disposal, the disposal facility is assumed to be under the control of a government agency which precludes inappropriate use of the disposal facility. Following this time, the institutional controls are assumed to become ineffective and persons are assumed to be allowed to intrude into the disposed waste mass and carry out such typical activities as construction of houses or living on the facility. The most restrictive of the scenarios (the scenario leading to the highest exposures) is then used to determine limiting concentrations for disposal of waste by the disposal methods investigated.

In general, scenarios such as consumption of food, inhalation of dust, or direct gamma exposure were found in these studies to be more restrictive than scenarios involving contaminated ground water. The former types of scenarios may be termed "concentration-limited" scenarios. That is, to calculate impacts from such scenarios as inhalation of dust or consumption of food grown in contaminated soil, one is interested in the concentration of the radionuclides in which the activity takes place. The radionuclide concentrations or the total activity contained elsewhere in the disposal facility does not enter into the calculation. On the other hand, ground-water scenarios are "activity-limited" and the impacts depend upon the total activity contained in the facility and not especially on the concentration of radionuclides in any particular portion of the disposal facility. In addition, although the impacts from the concentration-limited scenarios are site-specific to a degree, they are much less site-specific than the activity-limited scenarios.

This implies that the concentration-limited scenarios may be a useful way to classify wastes in a relatively nonsite-specific manner. Intrusion is a hypothetical event, but the potential impacts represent a kind of "hazard index" with which to rank the potential "hazard" of different waste streams or to classify waste for disposal.

In addition, the previous investigators generally did not make allowances for waste form. It was generally assumed that the waste/soil mixture was indistinguishable from dirt. That is, the waste/soil mixture dispersed into the air in a similar manner as dust from bare soil. Root uptake into plants for human consumption was calculated assuming that the radionuclides essentially

existed in a dissolved state in soil. The radionuclides were readily available for uptake by plant roots. One investigator did, however, investigate possible limits for activated or surface-contaminated metals (Ref. 2). Another investigator intrinsically considered waste form as part of his consideration of impacts to a potential future archeologist or artifact hunter (Ref. 5).

4.2.2 Intrusion Pathways Considered in the EIS

Given the above discussion, there may be a number of scenarios by which a potential intruder could be exposed to radiation. These scenarios range from potentially trivial events to events which could cause relatively significant exposures, and each scenario may have a finite probability of occurrence associated with it. Given this potential for significant intruder exposures, additional analysis is indicated in this environmental impact statement of methods which may be used to mitigate these exposures. However, to perform this analysis some preliminary decisons must be made on how the analysis is to be performed. There are two basic alternatives:

1. Devise a number of scenarios from the likeliest to the unlikeliest, assign each a fixed probability, and perform a risk analysis of the impacts; and

2. Determine a limited number of the most restrictive (high consequence) scenarios, assume the event occurs, and perform a consequence analysis of the impacts.

Neither of these two alternatives is totally satisfactory. For the first alternative, there may be any number of potential scenarios which could be invented, including minor variations. It would be impossible to consider all of these scenarios. In addition, it would be extremely difficult if not impossible to determine and assign numerical probabilities. Inadvertent intrusion is a hypothetical event that may or may not occur in the future. Given this uncertainty, it appears that a better approach would be alternative 2. This is the general approach followed by the previous investigators on waste classification. However, this also has its drawbacks. If extremely conservative, yet clearly unlikely scenarios are used, then the calculated results (which may involve conservatisms multiplied by conservatisms) can quickly become unrealistic and overly restrictive. This is especially important considering the hypothetical nature of the intrusion event.

NRC has, therefore, adopted a somewhat combined approach for numerical analysis. A limited number of intrusion scenarios are conservatively assumed to occur based upon consideration of typical human activities. The potential consequences are then calculated. However, given the hypothetical nature of the scenarios, once the intrusion scenario occurs, reasonably conservative actions on the part of the intruders are assumed to occur. In addition, some judgment is made as to the likelihood and extent of the scenarios occurring depending upon specific waste forms and disposal practices.

The intrusion scenarios considered in this environmental impact statement were developed based upon consideration of the work performed on waste classification by the above investigators. Two concentration-limited scenarios are considered as well as one activity-limited scenario. The concentration limited scenarios analyzed in the following subsections include (1) excavation into disposed waste or construction of a house or building upon the disposal facility and (2) persons living on the disposal facility. The activity-limited scenario analyzed involves potential use of contaminated water from a well drilled onsite. This scenario is analyzed in Chapter 5 as part of the ground-water migration analysis. Potential population exposures from radioactive material dispersed by intruders is also analyzed. All three scenarios are assumed to occur after institutional controls are assumed to be temporarily lost.

All scenarios are believed to be conservative and are discussed in detail in Appendix G.

4.2.2.1 Intruder-Construction Scenario

This scenario involves the assumed construction of a house directly into the disposed waste, and is referred to as the intruder-construction scenario. During construction activities, some of the waste is assumed to be contacted by the workmen (this could happen, for example, through construction of a basement). During construction, some of the waste is assumed to be dispersed into the air and onto the immediate area around the house. Exposures would principally occur through such pathways as inhalation of contaminated dust and exposure to direct gamma radiation from standing on contaminated soil and being immersed in a contaminated dust cloud. (A subset of this scenario called the intruder-discovery scenario, and involving reduced relative impacts, is discussed in Section 4.3.4.3.)

4.2.2.2 Intruder-Agriculture Scenario

The second scenario involves a potential situation in which an individual or individuals live in the house thus constructed. In addition to the exposure pathways for the construction case, the potential intruder could be exposed through consumption of food grown in the contaminated soil. (Consumption of water by the intruder from a well drilled at the site is analyzed in Chapter 5.) The length of time that the individuals would spend in the contaminated area would be greater for this scenario than for the intruder-construction scenario. This scenario is referred to as the intruder-agriculture scenario.

4.2.2.3 Population Exposures from Intrusion Activities

In this scenario, the waste which is uncovered and brought to the surface through inadvertent intrusion is transported offsite by surface water and wind. Exposures are calculated to the surrounding population.

4.3 DESCRIPTION AND IMPACTS OF BASE CASE (NO ACTION) AND OTHER ALTERNATIVES

4.3.1 Description of Base Case (No Action) Alternative

Base case impacts to an inadvertent intruder are calculated considering two scenarios for potential inadvertent intrusion. One scenario is the assumed construction of a house directly into the disposed waste (intruder-construction scenario). The second scenario involves a potential situation in which an individual or individuals live in the house that is constructed and consumes food grown at the site (intruder-agriculture scenario). To calculate impacts from these intruder scenarios, waste spectrum 1 is assumed to be disposed of at the reference (base case) facility that is sited, designed, and operated as described in Chapter 3 and as set out in detail in Appendix E. The waste is disposed of in regular shallow land burial trenches with a standard thin cap. Waste spectrum 1 refers to the base case waste and much of the waste is assumed to be in an easily compressible, readily degradable waste form with relatively high leaching characteristics. The waste is assumed to be randomly disposed into the reference facility and no specific actions are taken to provide consideration of potential future inadvertent intrusion. For purposes of analysis, varying periods of institutional control from 50-2000 years are assumed to be in effect after closure during which inadvertent intrusion would not occur.

4.3.2 Costs and Impacts of Base Case (No Action) Alternative

The radiological hazard to a potential intruder for the base case (no action) alternative is listed in Table 4.2 for seven organs for several time periods following license termination. For this analysis, the termination of the disposal facility license was assumed to immediately follow a two-year closure period. The hazard listed (in mrem/yr to an individual) is summed over all 23 radionuclides considered in the analysis and volume-averaged over all 36 waste streams disposed into the disposal facility. As can be seen, the highest potential exposures are those to the bone. Over the first 500 years, potential exposures from the intruder-construction scenario drop by a factor of 6 from about 6 rems to about one rem. Over the next 1500 years, however, potential exposures are reasonably constant, and are still at about 800 mrem of 2000 years. A somewhat similar pattern is observed for potential exposures to the lung.

The potential exposures were conservatively calculated giving no credit (with the exception of activated metal) for the ability of waste form to reduce airborne dispersion of radionuclides or uptake by plant roots. That is, the waste is assumed to behave and disperse in a similar manner to ordinary dirt.

Other base case costs and impacts are summarized in Table 4.3 for waste spectrum 1. Also shown in Table 4.3 are the costs and impacts for disposal of waste spectra 2-4 at the base case reference disposal facility. The costs and impacts are calculated over 20 years of waste generation, processing, transport, and disposal. The format for Table 4.3 will be generally utilized throughout the remainder of the EIS to present the costs and impacts of the various alternatives analyzed. Included on the first page are population exposures from waste processing and transportation; occupational exposures for waste processing,

Table 4.2 Summary of Potential Inadvertent Intruder Hazard to Seven Organs for 36 Waste Streams (Waste Spectrum 1)

(mrem)

	Body	Bone	Liver	Thyroid	Kidney	Lung	G-I Tract
YR = 50.							
INT CONS	4.983E+03*	6.753E+03	6.290E+03	4.877E+03	5.482E+03	5.933E+03	4.878E+03
INT AGRI	6.461E+03	6.995E+03	6.867E+03	6.309E+03	6.546E+03	6.723E+03	6.319E+03
YR = 100.							
INT CONS	1.502E+03	3.095E+03	2.684E+03	1.407E+03	1.958E+03	2.341E+03	1.408E+03
INT AGRI	1.769E+03	2.482E+03	2.206E+03	1.703E+03	1.918E+03	2.068E+03	1.703E+03
YR = 150.							
INT CONS	5.454E+02	2.019E+03	1.638E+03	4.584E+02	9.670E+02	1.311E+03	4.587E+02
INT AGRI	5.891E+02	1.210E+03	1.013E+03	5.490E+02	7.475E+02	8.818E+02	5.465E+02
YR = 200.							
INT CONS	2.400E+02	1.623E+03	1.263E+03	1.588E+02	6.333E+02	9.556E+02	1.590E+02
INT AGRI	2.233E+02	7.881E+02	6.262E+02	1.923E+02	3.773E+02	5.032E+02	1.890E+02
YR = 300.							
INT CONS	1.058E+02	1.362E+03	1.026E+03	3.284E+01	4.542E+02	7.651E+02	3.300E+01
INT AGRI	6.818E+01	5.725E+02	4.328E+02	4.311E+01	2.068E+02	3.285E+02	3.941E+01
YR = 400.							
INT CONS	8.558E+01	1.255E+03	9.325E+02	1.859E+01	3.993E+02	7.191E+02	1.873E+01
INT AGRI	4.869E+01	5.168E+02	3.844E+02	2.623E+01	1.737E+02	2.990E+02	2.245E+01
YR = 500.							
INT CONS	7.808E+01	1.183E+03	8.687E+02	1.567E+01	3.637E+02	6.994E+02	1.579E+01
INT AGRI	4.336E+01	4.851E+02	3.568E+02	2.277E+01	1.572E+02	2.889E+02	1.894E+01
YR = 1000.							
INT CONS	5.869E+01	9.769E+02	6.822E+02	9.964E+00	2.570E+02	6.645E+02	1.004E+01
INT AGRI	3.112E+01	3.980E+02	2.782E+02	1.600E+01	1.101E+02	2.706E+02	1.208E+01
YR = 2000.							
INT CONS	4.491E+01	8.264E+02	5.482E+02	6.007E+00	1.817E+02	6.350E+02	6.048E+00
INT AGRI	2.251E+01	3.347E+02	2.219E+02	1.131E+01	7.691E+01	2.558E+02	7.317E+00

*The listed exposures are copied directly from the INTRUDE code output (See Appendix H).

Table 4.3 Costs and Other Impacts of Base Case (No Action) Alternative

Impacts	Waste Spectra 1	2	3	4
Short-term population exposures: (man-mrem)				
Processing by waste generator	0	0	7.86E+6	8.23E+6
Processing at regional processing center	0	0	3.74E+4	3.74E+4
Waste transportation	7.12E+5	7.03E+5	5.26E+5	2.16E+5
Short-term occupational exposures: (man-mrem)				
Processing by waste generator*	-	+1.68E+6	+1.18E+6	-3.50E+5
Processing at regional processing center	0	1.25E+5	2.45E+4	3.79E+4
Waste transportation	6.89E+6	6.49E+6	5.51E+6	2.19E+6
Waste disposal	3.05E+6	2.93E+6	2.49E+6	1.13E+6
Waste generation and transport costs: ($)				
Processing by waste generator*	-	+3.38E+8	+1.15E+9	+1.08E+9
Processing at regional processing center	0	3.63E+7	9.50E+7	1.05E+8
Waste transportation	2.49E+8	2.29E+8	1.88E+8	1.19E+8
Disposal costs: ($)				
Design and op.	1.85E+8	1.82E+8	1.81E+8	1.79E+8
Postoperational	3.82E+7	3.82E+7	3.82E+7	3.82E+7
Total	2.23E+8	2.20E+8	2.19E+8	2.17E+8
Unit ($/m^3)	223	315	445	916
Energy use: (gal)*	--	+7.89E+6	+5.84E+7	+6.61E+7
Land use: (m^2)	3.47E+5	2.42E+5	1.71E+5	8.24E+4
Waste volume disposed: (m^3)				
Regular:				
o Chemical-Stable	2.95E+4	6.22E+4	1.16E+4	8.49E+3
o Chemical-Unstable	1.17E+5	7.40E+4	6.57E+4	6.57E+4
o No Chemical-Stable	2.23E+5	3.30E+5	4.04E+4	1.61E+5
o No Chemical-Unstable	6.30E+5	2.32E+5	1.15E+4	1.92E+3
o Total	1.00E+6	6.98E+5	4.93E+5	2.37E+5

Table 4.3 (continued)

Impacts	Waste Spectra 1	2	3	4
Total volume not acceptable: (m^3)	0	0	0	0
Direct intruder impacts:				
Body (mrem)				
o 100 C	1.502E+3	1.899E+3	3.113E+3	6.469E+3
A	1.769E+3	2.235E+3	3.667E+3	7.619E+3
o 500 C	7.808E+1	1.115E+2	1.582E+2	3.287E+2
A	4.336E+1	6.175E+1	8.781E+1	1.825E+2
Bone (mrem)				
o 100 C	3.095E+3	4.179E+3	6.340E+3	1.317E+4
A	2.482E+3	3.255E+3	5.111E+3	1.062E+4
o 500 C	1.183E+3	1.693E+2	2.396E+3	4.978E+3
A	4.851E+2	6.942E+2	9.823E+2	2.041E+3
Offsite releases from intrusion (at 100 years):				
Airborne impacts (man-millirem)				
o Body	2.242E+3	2.193E+3	2.016E+3	4.181E+3
o Bone	4.060E+4	3.970E+4	3.650E+4	7.569E+4
Waterborne impacts (millirem)				
o Body	8.475E-2	1.213E-1	1.716E-1	3.566E-1
o Bone	5.097E-1	7.297E-1	1.032E+0	2.145E+0

*Occupational exposures and processing costs by the waste generator for waste spectra 2-4 are presented as additional exposures and costs to those associated with waste spectrum 1. Similarly, energy use for waste spectra 2-4 are presented as an additional increment to that associated with waste spectrum 1.

transportation, and disposal; costs for waste processing and transportation; cost for disposal divided into design and operation costs, postoperational costs (closure and long-term care costs), and total disposal costs; total incremental energy used for processing, transportation, and disposal; land used for disposal; and total waste volume disposed of. Included on the second page are the long-term individual and population exposures resulting from disposal of the waste.

No short-term population exposures are shown for processing of the waste either at the point of generation or at a central processing facility. For the base case, it was assumed that none of the waste streams were subjected to incineration and in waste spectrum 1, no waste streams are delivered to a regional processing center. As discussed in Chapter 3, NRC also assumed for purposes of this EIS analysis, that operational releases from other waste processing operations (e.g., compaction and solidification) would be very small and as such they were not included. In any case, such potential releases would already be analyzed as part of licensing individual facilities. For this EIS, NRC is interested in estimating releases due to additional, more extensive, waste processing techniques. These releases are expected to be significant only for incineration. The population exposures due to transportation of the waste to the disposal facility were calculated to 7.12E+5 man-mrem.

Occupational exposures due to waste processing (also waste processing costs and energy use) are presented in this EIS as exposures in addition to those associated with waste spectrum 1. The NRC staff believes that it would be difficult to attempt to estimate the existing occupational exposures for waste management for all NRC and Agreement State licensees. In addition, the principal purpose of this EIS in regard to waste processing occupational exposures is to estimate incremental exposures associated with additional waste processing activities. This is believed to be in keeping with the purpose of this EIS.

Occupational exposures were also calculated for transportation and for handling of the waste during disposal operations (6.89E+6 man-mrem and 3.05E+6 man-mrem respectively).

Costs for waste processing are also presented as costs in addition to those associated with waste spectrum 1. Costs from transportation and disposal, however, were calculated. Unit disposal costs average \$223 per m^3 or \$6.32 per ft^3. The reader is referred to Appendices E, G, and Q for information about the costs and the methods by which they were determined. Other impact measures such as energy and land use were also calculated and are shown.

Page 2 of Table 4.2 shows the exposures to the inadvertent intruder calculated for the two scenarios, intruder-construction and intruder-agriculture. The exposures are calculated for two periods of active institutional control--100, and 500 years--and for two organs: whole body and bone. For purposes of analysis, each scenario is assumed to occur immediately following the end of the active institutional control period.

Finally, Table 4.2 shows the population exposures calculated due to releases of material to the offsite environment due to the intrusion event. The exposures are calculated at a time period of 100 years following license termination. Airborne impacts are calculated for the surrounding population within a 50-mile radius of the disposal facility. Waterborne impacts, however, are calculated to an individual. In the calculations, rainwater is assumed to erode the soil/waste mixture exposed by the intruder, and carry the contamination offsite to a nearby stream. The contaminated stream water is then assumed to be used by an individual for consumption, irrigation of crops, etc. As shown, the impacts to the inadvertent intruder himself are orders of magnitude higher than those to the surrounding population.

Tables 4.2 and 4.3 establish a baseline of cost and impact data calculated for the base case site and waste against which varying ways to mitigate these impacts can be compared. The data shows that the exposures calculated are relatively high at 100 years at which point they begin to decrease, leveling off at around 400-500 years. Although the exposures to the inadvertent intruder are not so high as to cause great (immediate life threatening) concern for the one or few individuals who might be exposed, some additional controls could be exercised that could reduce such potential exposures to lower levels during the 100-500 year time frame. Furthermore, the major portion of the exposures may be contributed by a few waste streams that could be controlled to reduce potential exposures.

4.3.2.1 Waste Spectra Nos. 2-4

Table 4.3 also presents the costs and impacts of disposing of improved waste forms, represented by waste spectra 2-4, at the reference base case facility. These have been included in this table principally to provide reference data on the other spectra for comparison with waste spectra 1 and to demonstrate two points:

1. As the volume of the waste is decreased through waste processing techniques such as compaction and incineration, exposure to an inadvertent intruder increases; and

2. Offsite population exposures from inadvertent intrusion activities are low and do not change significantly from one spectrum to another.

Considerable additional discussion regarding the effects of the waste spectra on the impact measures is provided in Chapter 5.

4.3.3 Description of Alternatives

NRC next analyzed a range of alternatives that could be applied to reduce the impacts to an inadvertent intruder and the costs and impacts of the alternatives. The alternatives analyzed fell into four categories:

1. Controlling the disposal of specific waste streams;

2. Waste form and packaging;

3. Institutional controls; and

4. Engineered and natural "intruder barriers" created through disposal facility design and operations.

Each is presented and analyzed below.

With respect to siting, site characteristics were not specifically analyzed with respect to reduction of intruder impacts. Considerations such as future population growth and land use development in the vicinity of the site and the extent of and economic significance of natural resources at the site could effect the potential for inadvertent intrusion. Such considerations would be applied in the siting of a near-surface disposal facility today. In general, selection of a site that does not have much resource value and which is not desirable for human activities would reduce the potential for inadvertent intrusion.

4.3.3.1 Controlling the Disposal of Specific Waste Streams

For this alternative, it is useful to examine the potential hazard of some individual waste streams and groups of waste streams in terms of intruder exposures. Care needs to be taken in interpreting the potential hazard of individual waste streams, however, since the actual potential intruder hazard at any particular site would come from a mixture of waste streams, not just one individual waste stream. This is particularly important for waste streams which are small in volume. In this section, no credit is again assumed for the ability of improved waste forms to reduce airborne and plant root uptake.

As an example, a summary of potential intruder hazard to whole body and bone for BWR ion-exchange resins is shown in Table 4.4. As can be seen, the potential exposures to whole body and bone are principally dominated by direct gamma radiation in the intruder-construction and intruder-agriculture scenarios. The differences in potential exposures between the four spectra for the two cases are a function of the waste processing option considered. That is, for waste spectrum 1, ion-exchange resins are assumed to be dewatered while for waste spectrum 2, half of the resins are solidified in cement and half in a synthetic polymer. The increase in volume relative to the dewatered condition coupled with the self-shielding provided by the cement leads to a reduction in exposures of about 2. For spectrum 3, all resins are solidified in a synthetic polymer. Due to the negligible self-shielding and the different volume increase factor, the potential hazard is somewhat higher than spectrum 2 but lower than spectrum 1. For spectrum 4, all resins are calcined and then solidified in a synthetic polymer. The greatly increased volume reduction brought about by the calcining operation leads to radionuclide concentrations in the final waste form about a factor of 18 higher than for spectrum 3. Even with the higher concentrations, however, potential exposures drop quickly to about 100 mrem/yr after 500 years.

Table 4.4 Potential Intruder Exposures to Whole Body and Bone for BWR Ion-Exchange Resins

(mrem)

	Spectrum 1		Spectrum 2		Spectrum 3		Spectrum 4	
	Body	Bone	Body	Bone	Body	Bone	Body	Bone
YR = 50.								
INT CONS	6.197E+04	6.198E+04	3.005E+04	3.005E+04	3.098E+04	3.099E+04	5.577E+05	5.578E+05
INT AGRI	7.343E+04	7.356E+04	3.561E+04	3.569E+04	3.671E+04	3.678E+04	6.608E+05	6.620E+05
YR = 100.								
INT CONS	1.930E+04	1.931E+04	9.358E+03	9.365E+03	9.650E+03	9.656E+03	1.737E+05	1.738E+05
INT AGRI	2.287E+04	2.291E+04	1.109E+04	1.112E+04	1.143E+04	1.146E+04	2.058E+05	2.062E+05
YR = 150.								
INT CONS	6.087E+03	6.096E+03	2.915E+03	2.957E+03	3.043E+03	3.048E+03	5.478E+04	5.487E+04
INT AGRI	7.212E+03	7.229E+03	3.497E+03	3.507E+03	3.606E+03	3.614E+03	6.490E+04	6.506E+04
YR = 200.								
INT CONS	1.924E+03	1.932E+03	9.330E+02	9.380E+02	9.621E+02	9.662E+02	1.732E+04	1.739E+04
INT AGRI	2.280E+03	2.288E+03	1.105E+03	1.111E+03	1.140E+03	1.144E+03	2.052E+04	2.059E+04
YR = 300.								
INT CONS	1.993E+02	2.064E+02	9.671E+01	1.010E+02	9.967E+01	1.032E+02	1.794E+03	1.858E+03
INT AGRI	2.361E+02	2.404E+02	1.145E+02	1.171E+02	1.180E+02	1.202E+02	2.124E+03	2.162E+03
YR = 400.								
INT CONS	2.805E+01	3.431E+01	1.365E+01	1.745E+01	1.402E+01	1.716E+01	2.524E+02	3.088E+02
INT AGRI	3.317E+01	3.657E+01	1.613E+01	1.819E+01	1.658E+01	1.828E+01	2.981E+02	3.274E+02
YR = 500.								
INT CONS	1.097E+01	1.663E+01	5.363E+00	8.797E+00	5.484E+00	8.317E+00	9.872E+01	1.497E+02
INT AGRI	1.296E+01	1.593E+01	6.331E+00	8.134E+00	6.478E+00	7.966E+00	1.163E+02	1.417E+02
YR = 1000.								
INT CONS	8.769E+00	1.270E+01	4.281E+00	6.665E+00	4.385E+00	6.352E+00	7.892E+01	1.143E+02
INT AGRI	1.044E+01	1.255E+01	5.102E+00	6.379E+00	5.220E+00	6.273E+00	9.363E+01	1.113E+02
YR = 2000.								
INT CONS	8.361E+00	1.110E+01	4.072E+00	5.732E+00	4.181E+00	5.550E+00	7.525E+01	9.989E+01
INT AGRI	1.001E+01	1.157E+01	4.888E+00	5.833E+00	5.005E+00	5.785E+00	8.981E+01	1.027E+02

Also of interest is the potential thyroid hazard for BWR resins as shown in Table 4.5. BWR ion-exchange resins are estimated to contain a relatively high concentration of ^{129}I. Although several radionuclides contribute to the thyroid exposures, the high contribution from ^{129}I results in a somewhat different pattern of exposure than for whole body and bone. The calculations for both cases ignore the dilution of ^{129}I with stable iodine, which would act to reduce exposures.

A similar situation is shown in Table 4.6 for the BWR combustible trash stream. In waste spectrum 1, no special effort is made to reduce the volume of this waste stream while in waste spectrum 2, this stream is assumed to be compacted. In waste spectra 3 and 4, the stream is assumed to be incinerated and the ashes solidified in a synthetic polymer. Of interest are the effects of increased volume reduction. Even under extreme volume reduction--i.e., incineration--the potential hazard is under 500 mrem after 200 years and only a few millirems after 400 years.

This process may be potentially repeated for the other 34 waste streams. However, it is believed that presenting the results would be excessively voluminous. Table 4.6 was therefore prepared, which is a summary of potential intruder hazard to whole body and bone for 4 groups of waste streams under waste spectrum 2. (Waste spectrum 2 was selected since it represents readily achievable improvements in the form of waste shipped for disposal.) The 4 groups of waste streams are as follows:

- Group 1: LWR process waste streams (resins, filter media, solidified concentrated liquids and filter cartridges).
- Group 2: Trash waste streams for both fuel cycle and nonfuel cycle waste streams.
- Group 3: Other miscellaneous low-activity waste streams.
- Group 4: Miscellaneous "special" or high activity waste streams from both fuel-cycle and nonfuel-cycle waste streams.

As can be seen, exposures for group 1 (which is a volume-weighted average of 7 waste streams) are initially relatively high (e.g., about 5 rems at 100 years) but soon drop to relative low levels (e.g., about 500 mrem at 200 years and only a few mrem at 500 years). The hazard calculated for groups 2 and 3 are even less significant. However, the hazard from the group 4 waste streams (a mixture of 7 individual waste streams) appears to be significant. In addition, the potential hazard for group 4 waste streams does not decay as rapidly as the other group waste streams. For example, the hazard is approximately 10 times higher than group 1 at 100 years and a factor of 10^4 times higher than group 1 at 500 years.

The potential hazard in group 4 is principally contributed by only three waste streams, the total volume of which contributes only 20,200 m^3 out of the 698,000 m^3 disposed of in waste spectrum 2. These are:

Table 4.5 Potential Intruder Exposures to Thyroid for BWR Ion-Exchange Resins

	(mrem)			
	Spectrum 1	Spectrum 2	Spectrum 3	Spectrum 4
YR = 50.				
INT CONS	6.196E+04	3.004E+04	3.098E+04	5.576E+05
ING AGRI	7.345E+04	3.562E+04	3.672E+04	6.610E+05
YR = 100.				
INT CONS	1.930E+04	9.358E+03	9.650E+03	1.737E+05
INT AGRI	2.293E+04	1.113E+04	1.146E+04	2.063E+05
YR = 150.				
INT CONS	6.089E+03	2.953E+03	3.044E+03	5.480E+04
INT AGRI	7.281E+03	3.539E+03	3.641E+03	6.553E+04
YR = 200.				
INT CONS	1.927E+03	9.345E+02	9.633E+02	1.734E+04
INT AGRI	2.352E+03	1.150E+03	1.176E+03	2.117E+04
YR = 300.				
INT CONS	2.022E+02	9.843E+01	1.011E+02	1.820E+03
INT AGRI	3.102E+02	1.595E+02	1.551E+02	2.792E+03
YR = 400.				
INT CONS	3.097E+01	1.542E+01	1.548E+01	2.787E+02
INT AGRI	1.075E+02	6.117E+01	5.374E+01	9.669E+02
YR = 500.				
INT CONS	1.393E+01	7.158E+00	6.965E+00	1.254E+02
INT AGRI	8.730E+01	5.139E+01	4.365E+01	7.853E+02
YR = 1000.				
INT CONS	1.186E+01	6.154E+00	5.930E+00	1.067E+02
INT AGRI	8.483E+01	5.019E+01	4.242E+01	7.632E+02
YR = 2000.				
INT CONS	1.154E+01	5.999E+00	5.771E+00	1.039E+02
INT AGRI	8.444E+01	5.000E+01	4.222E+01	7.597E+02

Table 4.6 Summary of Potential Intruder Exposures to Whole Body and Bone for BWR Combustible Trash

(mrem)

	Spectrum 1		Spectrum 2		Spectrum 3		Spectrum 4	
	Body	Bone	Body	Bone	Body	Bone	Body	Bone
YR = 50.								
INT CONS	2.190E+02	2.193E+02	4.380E+02	4.386E+02	8.760E+03	8.772E+03	8.760E+03	8.772E+03
INT AGRI	2.595E+02	2.601E+02	5.190E+02	5.201E+02	1.038E+04	1.040E+04	1.038E+04	1.040E+04
YR = 100.								
INT CONS	6.760E+01	6.785E+01	1.352E+02	1.357E+02	2.704E+03	2.714E+03	2.704E+03	2.714E+03
INT AGRI	8.008E+01	8.033E+01	1.602E+02	1.607E+02	3.203E+03	3.212E+03	3.203E+03	3.213E+03
YR = 150.								
INT CONS	2.135E+01	2.157E+01	4.269E+01	4.314E+01	8.538E+02	8.628E+02	8.538E+02	8.628E+02
INT AGRI	2.528E+01	2.542E+01	5.056E+01	5.084E+01	1.011E+03	1.017E+03	1.011E+03	1.017E+03
YR = 200.								
INT CONS	6.775E+00	6.978E+00	1.355E+01	1.396E+01	2.710E+02	2.791E+02	2.710E+02	2.791E+02
INT AGRI	8.017E+00	8.120E+00	1.603E+01	1.624E+01	3.207E+02	3.248E+02	3.207E+02	3.248E+02
YR = 300.								
INT CONS	7.335E-01	9.105E-01	1.471E+00	1.821E+00	2.942E+01	3.642E+01	2.942E+01	3.642E+01
INT AGRI	8.632E-01	9.402E-01	1.726E+00	1.880E+00	3.452E+01	3.758E+01	3.452E+01	3.758E+01
YR = 400.								
INT CONS	1.343E-01	2.891E-01	2.685E-01	5.782E-01	5.371E+00	1.156E+01	5.371E+00	1.156E+01
INT AGRI	1.519E-01	2.178E-01	3.039E-01	4.357E-01	6.072E+00	8.687E+00	6.072E+00	8.687E+00
YR = 500.								
INT CONS	7.306E-02	2.125E-01	1.461E-01	4.249E-01	2.922E+00	8.498E+00	2.922E+00	8.498E+00
INT AGRI	8.025E-02	1.389E-01	1.605E-01	2.778E-01	3.205E+00	5.529E+00	3.205E+00	5.529E+00
YR = 1000.								
INT CONS	6.077E-02	1.548E-01	1.215E-01	3.096E-01	2.431E+00	6.192E+00	2.431E+00	6.192E+00
INT AGRI	6.830E-02	1.078E-01	1.366E-01	2.156E-01	2.727E+00	4.287E+00	2.727E+00	4.287E+00
YR = 2000.								
INT CONS	5.564E-02	1.183E-01	1.113E-01	2.366E-01	2.225E+00	4.731E+00	2.225E+00	4.731E+00
INT AGRI	6.401E-02	9.071E-02	1.280E-01	1.814E-01	2.556E+01	3.606E+00	2.556E+00	3.606E+00

Table 4.7 Summary of Potential Intruder Exposures to Whole Body and Bone for Four Groups of Waste Streams Under Waste Spectrum 2

(mrem)

	Group 1		Group 2		Group 3		Group 4	
	Body	Bone	Body	Bone	Body	Bone	Body	Bone
YR = 50.								
INT CONS	1.409E+04	1.412E+04	4.449E+02	4.467E+02	2.572E+01	2.651E+01	6.102E+04	1.312E+05
INT AGRI	1.670E+04	1.675E+04	5.375E+02	5.483E+02	4.938E+01	9.470E+01	9.417E+04	1.146E+05
YR = 100.								
INT CONS	4.347E+03	4.371E+03	1.364E+02	1.377E+02	7.989E+00	8.236E+00	1.746E+04	8.066E+04
INT AGRI	5.150E+03	5.174E+03	1.633E+02	1.688E+02	1.426E+02	2.856E+01	2.022E+04	4.826E+04
YR = 150.								
INT CONS	1.373E+03	1.395E+03	4.312E+01	4.431E+01	2.545E+00	2.635E+00	8.338E+03	6.680E+04
INT AGRI	1.626E+03	1.640E+03	5.162E+01	5.426E+01	4.440E+00	8.976E+00	7.598E+03	3.216E+04
YR = 200.								
INT CONS	4.362E+02	4.562E+02	1.375E+01	1.483E+01	8.330E-01	8.765E-01	5.305E+03	6.020E+04
INT AGRI	5.160E+02	5.264E+02	1.653E+01	1.821E+01	1.476E+00	3.126E+00	3.858E+03	2.622E+04
YR = 300.								
INT CONS	4.790E+01	6.511E+01	1.566E+00	2.507E+00	1.250E-01	1.513E-01	3.744E+03	5.359E+04
INT AGRI	5.595E+01	6.372E+01	2.004E+00	3.219E+00	2.890E+01	8.474E-01	2.165E+03	2.216E+04
YR = 400.								
INT CONS	9.193E+00	2.445E+01	3.476E-01	1.185E+00	5.494E-02	7.970E-02	3.317E+03	4.973E+04
INT AGRI	1.018E+01	1.677E+01	5.549E-01	1.660E+00	1.753E-01	6.365E-01	1.835E+03	2.040E+04
YR = 500.								
INT CONS	5.214E+00	1.897E+01	2.190E-01	9.747E-01	4.799E-02	7.261E-02	3.057E+03	4.691E+04
INT AGRI	5.549E+00	1.137E+01	4.037E-01	1.450E+00	1.633E-01	6.115E-01	1.668E+03	1.919E+04
YR = 1000.								
INT CONS	4.287E+00	1.361E+01	1.773E-01	6.881E-01	4.720E-02	7.168E-02	2.294E+03	3.876E+04
INT AGRI	4.705E+00	8.605E+00	3.576E-01	1.250E+00	1.559E-01	5.781E-01	1.189E+03	1.575E+04
YR = 2000.								
INT CONS	3.859E+00	1.010E+01	1.546E-01	4.945E-01	4.714E-02	7.139E-02	1.749E+03	3.280E+04
INT AGRI	4.373E+00	7.020E+00	3.212E-01	1.067E+00	1.444E-01	5.205E-01	8.495E+02	1.324E+04

- LWR decontamination resins (1.933E+4 m^3)
- Sources (51.51 m^3)
- LWR nonfuel reactor core components (797.5 m^3)

The potential hazard as a function of time for whole body and bone for LWR decontamination resins and sources is given in Tables 4.8 and 4.9, respectively. The potential hazard for seven organs for LWR nonfuel core components is shown in Table 4.10.

There is considerable uncertainty about the actual radionuclide concentrations in these waste streams. For example, the LWR decontamination resin stream is somewhat hypothetical and is based upon an assumption that all LWRs will undergo, in the future, a periodic full-scale decontamination process every 7 years. The purpose of such full-scale primary decontamination operations is to reduce plant personnel exposure by removing crud accumulated on surfaces in contact with the primary coolant. Although full-scale primary coolant decontamination operations have not been routinely performed in the past, NRC has fairly recently (October 1980) published an environmental impact statement regarding such an operation being performed at the Dresden Unit 1 nuclear power station (Ref. 6). Dresden 1 is a 200 MW(e) dual-cycle BWR which, over its 20-year operating life, has built up a thin layer of radioactive oxide deposits (principally Co-60) over the inner surfaces of pipes, valves, pumps, etc. In the decontamination process, a decontamination solution is circulated and flushed through the coolant system, which dissolves the crud deposits. The decontamination solution is then removed from the coolant system and processed through an evaporator. The evaporator bottoms are then solidified in vinyl ester styrene (a synthetic polymer), which are then shipped offsite for disposal. Since the solidified waste will contain a large quantity of chelating agents, the waste will be disposed only at a disposal facility located in an arid environment and segregated from other waste by at least 3 meters of soil (Ref. 6).

Although the Dresden 1 decontamination operation can be considered in some respects a prototype of future full-scale primary coolant decontamination operations at other power plants, it is still difficult to project future volumes and other characteristics of decontamination wastes. There may be a number of possible decontamination processes utilized--e.g., from dilute chemical processes on an annual basis to more concentrated processes at intervals of several years--and the waste streams generated may vary in kind (e.g., resins, solidified liquids) and in volume from operation to operation and plant to plant. Other plant-specific factors which would influence the volumes, radioactivity content, and other characteristics of the wastes generated would include the operating history of the plant (e.g., history of fuel failures), the design of the plant and liquid clean-up and processing systems, the chemistry of the primary coolant, and the length of time between decontamination operations. Institutional matters such as the policies of specific utilities could also be a consideration.

Notwithstanding this uncertainty, the NRC staff believes that wastes generated from routine full-scale decontamination of reactor primary coolant systems should be represented in the low-level waste source data base. For this EIS,

Table 4.8 Summary of Potential Intruder Hazard to Whole Body and Bone for Postulated Future LWR Decontamination Resin Stream

	(mrem)	
	Body	Bone
YR = 50.		
INT CONS	2.805E+04	1.187E+05
ING AGRI	2.927E+04	6.654E+04
YR = 100.		
INT CONS	7.522E+03	8.926E+04
INT AGRI	5.193E+03	3.829E+04
YR = 150.		
INT CONS	6.032E+03	8.170E+04
INT AGRI	3.664E+03	3.411E+04
YR = 200.		
INT CONS	5.356E+03	7.642E+04
INT AGRI	3.072E+03	3.158E+04
YR = 300.		
INT CONS	4.682E+03	6.923E+04
INT AGRI	2.598E+03	2.843E+04
YR = 400.		
INT CONS	4.265E+03	6.438E+04
INT AGRI	2.340E+03	2.637E+04
YR = 500.		
INT CONS	3.943E+03	6.076E+04
INT AGRI	2.142E+03	2.484E+04
YR = 1000.		
INT CONS	2.962E+03	5.026E+04
INT AGRI	1.527E+03	2.041E+04
YR = 2000.		
INT CONS	2.260E+03	4.257E+04
INT AGRI	1.090E+03	1.718E+04

Table 4.9 Summary of Potential Inadvertent Intruder Hazard for Whole Body and Bone for Postulated Sources Stream

	(mrem)	
	Body	Bone
YR = 50.		
INT CONS	1.064E+07	1.074E+07
INT AGRI	1.267E+07	1.276E+07
YR = 100.		
INT CONS	3.358E+06	3.450E+06
INT AGRI	3.983E+06	4.045E+06
YR = 150.		
INT CONS	1.064E+06	1.149E+06
ING AGRI	1.258E+06	1.300E+06
YR = 200.		
INT CONS	3.409E+05	4.195E+05
INT AGRI	3.998E+05	4.337E+05
YR = 300.		
INT CONS	4.036E+04	1.079E+05
INT AGRI	4.382E+04	7.107E+04
YR = 400.		
INT CONS	9.614E+03	6.771E+04
INT AGRI	7.920E+03	3.118E+04
YR = 500.		
INT CONS	5.777E+03	5.573E+04
INT AGRI	3.857E+03	2.384E+04
YR ≐ 1000.		
INT CONS	2.562E+03	2.604E+04
INT AGRI	1.631E+03	1.102E+04
YR = 2000.		
INT CONS	5.661E+02	5.752E+03
INT AGRI	3.604E+02	2.434E+03

Table 4.10 Summary of Potential Inadvertent Intruder Exposures to Seven Organs for LWR Nonfuel Reactor Core Components

(mrem)

	Body	Bone	Liver	Thyroid	Kidney	Lung	GI Tract
YR = 50.							
INT CONS	7.363E+04	7.406E+04	7.365E+04	7.361E+04	7.361E+04	7.367E+04	7.362E+04
INT AGRI	8.733E+04	9.161E+04	8.749E+04	8.718E+04	8.718E+04	8.720E+04	8.725E+04
YR = 100.							
INT CONS	3.587E+02	6.559E+02	3.698E+02	3.485E+02	3.485E+02	3.572E+02	3.524E+02
INT AGRI	5.182E+02	3.460E+03	6.270E+02	4.162E+02	4.162E+02	4.196E+02	4.599E+02
YR = 150.							
INT CONS	2.555E+02	4.595E+02	2.631E+02	2.485E+02	2.485E+02	2.544E+02	2.511E+02
INT AGRI	3.678E+02	2.392E+03	4.427E+02	2.976E+02	2.976E+02	3.000E+02	3.278E+02
YR = 200.							
INT CONS	2.527E+02	3.925E+02	2.580E+02	2.479E+02	2.479E+02	2.520E+02	2.497E+02
INT AGRI	3.453E+02	1.739E+03	3.969E+02	2.970E+02	2.970E+02	2.986E+02	3.177E+02
YR = 300.							
INT CONS	2.494E+02	3.156E+02	2.159E+02	2.471E+02	2.471E+02	2.491E+02	2.480E+02
INT AGRI	3.191E+02	9.841E+02	3.436E+02	2.960E+02	2.960E+02	2.968E+02	3.059E+02
YR = 400.							
INT CONS	2.474E+02	2.788E+02	2.487E+02	2.463E+02	2.463E+02	2.473E+02	2.468E+02
INT AGRI	3.062E+02	6.278E+02	3.181E+02	2.950E+02	2.950E+02	2.954E+02	2.998E+02
YR = 500.							
INT CONS	2.461E+02	2.610E+02	2.467E+02	2.455E+02	2.455E+02	2.460E+02	2.458E+02
INT AGRI	2.996E+02	4.594E+02	3.055E+02	2.940E+02	2.940E+02	2.942E+02	2.964E+02
YR = 1000.							
INT CONS	2.417E+02	2.424E+02	2.418E+02	2.416E+02	2.416E+02	2.417E+02	2.417E+02
INT AGRI	2.899E+02	3.083E+02	2.906E+02	2.892E+02	2.892E+02	2.893E+02	2.895E+02
YR = 2000.							
INT CONS	2.341E+02	2.344E+02	2.341E+02	2.340E+02	2.340E+02	2.341E+02	2.340E+02
INT AGRI	2.804E+02	2.941E+02	2.810E+02	2.799E+02	2.799E+02	2.799E+02	2.801E+02

it is assumed that every operating LWR undergoes a full-scale primary coolant decontamination operation every 7 years using a dilute chemical decontamination process. Generated wastes are represented by spent ion exchange resins containing significant quantities of chelating agents and other decontamination chemicals.

To estimate concentrations, data was used based upon crud scrapings from the internals of a light water reactor. Use of this procedure to estimate radionuclide concentrations in this stream results in estimated transuranic concentrations in considerable excess of 10 nCi/gm. Thus, the waste stream as postulated would not be acceptable for disposal at existing LLW disposal facilities. Use of crud scrapings to estimate concentrations is believed to be conservative and perhaps overconservative, since data from the Dresden 1 decontamination operations indicates that the generated decontamination waste will have transuranic concentrations less than 10 nCi/gm (Ref. 6). Despite this, however, the NRC staff believes that the low Dresden 1 transuranic concentrations may not be indicative of all future large-scale decontamination operations. As discussed above, the characteristics of future decontamination wastes are uncertain and may be a function of a number of plant-specific conditions. Thus, it would appear to be appropriate to determine radionuclide concentrations in future full-scale decontamination waste streams on a plant-specific basis.

Another waste stream for which there is little information at this time is the sources waste stream. This waste stream is a composite of sealed sources, foils, and similar wastes, and in determining the radionuclide concentrations, the higher activity examples were given greatest consideration. As shown in Table 4.9, the calculated hazard is extremely high, which is unrealistic and is a function of the extremely small volume (51.5 m^3) of this waste stream. In reality, the actual potential impacts would be much lower due to the considerable dilution that would occur with the other lower activity waste streams. Given this, however, the table is still useful in that it illustrates the relative contribution of total hazard from different isotopes. Initially, most of the hazard is provided by gamma radiation emitted by Cs-137 (see Appendix D). As the cesium decays away (noted by the characteristic decay by a factor of 10 every 100 years), most of the longer-term hazard is provided by the assumed high concentrations of americium from large americium sources. Currently, disposal of large americium sources is not permitted in existing disposal facilities. NRC has, however, included such sources in the waste spectra to allow an estimate of the possible hazard of their disposal into a near-surface disposal facility.

The third stream--LWR nonfuel reactor core components--is composed of activated metal and the potential hazard is shown on Table 4.10. Since the waste stream is composed of activated metal, most of the hazard is from direct gamma radiation. As can be seen, the estimated hazard is somewhat higher than the group 1 process waste streams but considerably less than the other two streams discussed above.

Given the above analysis, it appears that by controlling the disposal of a few waste streams, potential intruder hazards could be considerably reduced. For example, Table 4.11 shows the potential hazard to whole body and bone from all waste streams assuming that the LWR decontamination stream (high TRU content) and the sources streams (large americium sources) are excluded from near-surface disposal. Comparing Table 4.11 with Tables 4.2 and 4.3, it can be seen that removal of these two streams results in only a slightly smaller hazard over the first few hundred years, which is the time period over which most of the hazard is dominated by direct gamma radiation from the disposed waste. However, the reduction in the potential long-term hazard is significant--i.e., only a few millirem rather than potentially several hundred millirem. Similarly, Table 4.7 is repeated as Table 4.12, except that the 2 waste streams in question are again removed from group 4. As can be seen, removal of these waste streams results in an overall reduction of hazard. The long-term hazard associated with group 4 is reduced by several orders of magnitude.

4.3.4 Waste Form and Packaging

Another way in which potential intruder exposures can be reduced is through improvements in waste form and packaging. These improvements can lead to reduced exposures in two principal ways:

1. The potential for the waste to be dispersed into a form which can be readily inhaled or taken up by plant roots is reduced if the waste is placed into a stable form or package; and

2. The likelihood that the intruder will stay in contact with the waste (e.g., construct in it, grow crops in it) is reduced if the waste is placed into a stable form or package.

4.3.4.1 Effectiveness of Waste Form

If the waste is contacted through inadvertent intrusion, then potential inhalation exposures should be reduced if the waste is in a stable, less dispersible waste form. Similarly, exposure pathways which occur through consumption of food grown in contaminated ground should also be reduced if the waste were in a low leaching form. In order for radionuclides to be taken up by plants, the radionuclides must first be dissolved and leached out of the waste.

Different conclusions regarding the effect of waste form have been reached by other investigators performing analyses regarding work on waste classification. For example, one group of investigators, in a study which followed their work on waste classification, questioned the option of placing the waste into a durable form, and concluded that it may be better to disperse the waste into soil rather than concentrate it into a waste package where it may be encountered by an intruder (Ref. 7). As stated by the authors:

> Packaging waste in durable containers has generally been considered beneficial to waste disposal. This is not always correct, because an effective container prevents the waste from being diluted with the

Table 4.11 Summary of Potential Intruder Exposures to Whole Body and Bone From 34 Waste Streams

(mrem)

	Spectrum 1		Spectrum 2		Spectrum 3		Spectrum 4	
	Body	Bone	Body	Bone	Body	Bone	Body	Bone
YR = 50.								
INT CONS	3.969E+03	3.981E+03	4.889E+03	4.906E+03	8.127E+03	8.151E+03	1.693E+04	1.698E+04
INT AGRI	5.344E+03	5.149E+03	6.720E+03	6.438E+03	1.090E+04	1.052E+04	2.271E+04	2.191E+04
YR = 100.								
INT CONS	1.207E+03	1.214E+03	1.484E+03	1.494E+03	2.473E+03	2.487E+03	5.152E+03	5.181E+03
INT AGRI	1.492E+03	1.563E+03	1.848E+03	1.950E+03	3.054E+03	3.195E+03	6.362E+03	6.655E+03
YR = 150.								
INT CONS	3.812E+02	3.865E+02	4.686E+02	4.764E+02	7.811E+02	7.917E+02	1.627E+03	1.649E+03
INT AGRI	4.623E+02	4.930E+02	5.707E+02	6.151E+02	9.466E+02	1.008E+03	1.972E+03	2.099E+03
YR = 200.								
INT CONS	1.211E+02	1.257E+02	1.490E+02	1.556E+02	2.482E+02	2.573E+02	5.170E+02	5.360E+02
INT AGRI	1.461E+02	1.578E+02	1.803E+02	1.971E+02	2.991E+02	3.221E+02	6.232E+02	6.708E+02
YR = 300.								
INT CONS	1.336E+01	1.716E+01	1.648E+01	2.196E+01	2.733E+01	3.488E+01	5.693E+01	7.267E+01
INT AGRI	1.597E+01	1.919E+01	1.973E+01	2.439E+01	3.258E+01	3.873E+01	6.786E+01	8.056E+01
YR = 400.								
INT CONS	2.624E+00	5.960E+00	3.280E+00	8.096E+00	5.327E+00	1.197E+01	1.110E+01	2.493E+01
INT AGRI	3.061E+00	5.122E+00	3.817E+00	6.793E+00	6.147E+00	9.975E+00	1.279E+01	2.071E+01
YR = 500.								
INT CONS	1.526E+00	4.522E+00	1.925E+00	6.251E+00	3.078E+00	9.041E+00	6.412E+00	1.883E+01
INT AGRI	1.756E+00	3.462E+00	2.205E+00	4.668E+00	3.475E+00	6.598E+00	7.224E+00	1.367E+01
YR = 1000.								
INT CONS	1.290E+00	3.312E+00	1.617E+00	4.536E+00	2.596E+00	6.619E+00	5.407E+00	1.379E+01
INT AGRI	1.521E+00	2.670E+00	1.906E+00	3.566E+00	2.997E+00	5.029E+00	6.230E+00	1.041E+01
YR = 2000.								
INT CONS	1.183E+00	2.537E+00	1.474E+00	3.429E+00	2.379E+00	5.073E+00	4.956E+00	1.057E+01
INT AGRI	1.424E+00	2.265E+00	1.779E+00	2.993E+00	2.807E+00	4.254E+00	5.834E+00	8.799E+00

Table 4.12 Summary of Potential Intruder Exposures to Whole Body and Bone for Four Waste Groups of 34 Waste Streams Under Waste Spectrum 2

(mrem)

	Group 1		Group 2		Group 3		Group 4	
	Body	Bone	Body	Bone	Body	Bone	Body	Bone
YR = 50.								
INT CONS	1.409E+04	1.412E+04	4.449E+02	4.467E+02	2.572E+01	2.651E+01	7.716E+04	7.808E+04
INT AGRI	1.670E+04	1.675E+04	5.375E+02	5.483E+02	4.938E+01	9.470E+01	2.001E+05	1.631E+05
YR = 100.								
INT CONS	4.347E+03	4.371E+03	1.364E+02	1.377E+02	7.989E+00	8.236E+00	2.096E+04	2.125E+04
INT AGRI	5.150E+03	5.174E+03	1.633E+02	1.688E+02	1.426E+01	2.856E+01	3.532E+04	4.592E+04
YR = 150.								
INT CONS	1.373E+03	1.395E+03	4.312E+01	4.431E+01	2.545E+00	2.635E+00	6.619E+03	6.724E+03
INT AGRI	1.626E+03	1.640E+03	5.162E+01	5.426E+01	4.440E+00	8.976E+00	9.630E+03	1.414E+04
YR = 200.								
INT CONS	4.362E+02	4.562E+02	1.375E+01	1.483E+01	8.330E-01	8.765E-01	2.109E+03	2.154E+03
INT AGRI	5.160E+02	5.264E+02	1.653E+01	1.821E+01	1.476E+00	3.126E+00	2.947E+03	4.450E+03
YR = 300.								
INT CONS	4.790E+01	6.511E+01	1.566E+00	2.507E+00	1.250E-01	1.513E-01	2.422E+02	2.564E+02
INT AGRI	5.595E01	6.372E+01	2.004E+00	3.219E+00	2.890E-01	8.474E-01	3.258E+02	5.323E+02
YR = 400.								
INT CONS	9.193E+00	2.445E+01	3.476E-01	1.185E+00	5.494E-02	7.970E-02	5.681E+01	6.404E+01
INT AGRI	1.018E+01	1.677E+01	5.549E-01	1.660E+00	1.753E-01	6.365E-01	7.200E+01	1.276E+02
YR = 500.								
INT CONS	5.214E+00	1.897E+01	2.190E-01	9.747E-01	4.799E-02	7.261E-02	3.823E+01	4.271E+01
INT AGRI	5.549E+00	1.137E+01	4.037E-01	1.450E+00	1.633E-01	6.115E-01	4.654E+01	6.069E+01
YR = 1000.								
INT CONS	4.287E+00	1.361E+01	1.773E-01	6.881E-01	4.720E-02	7.168E-02	3.547E+01	3.700E+01
INT AGRI	4.705E+00	8.605E+00	3.576E-01	1.250E+00	1.559E-01	5.781E-01	4.245E+01	4.562E+01
YR = 2000.								
INT CONS	3.859E+00	1.010E+01	1.546E-01	4.945E-01	4.714E-02	7.139E-02	3.428E+01	3.513E+01
INT AGRI	4.373E+00	7.020E+00	3.212E-01	1.067E+00	1.444E-01	5.205E-01	4.102E+01	4.327E+01

> surrounding soil. If the reclaimer scenarios are limiting, as for Class D and Class E waste [waste determined by the authors to be suitable for disposal by shallow land burial and by a sanitary landfill, respectively (see Ref. 3)] and the container keeps the waste from being diluted, the potential dose rate to the reclaimer can be higher.
>
> If the ground water or well water pathways are most restrictive, then the container or chemical form of the waste can greatly reduce the rate at which the isotopes enter the aquifer.

Other author questioned the practice of using plastic bags to cover pieces of transuranic-contaminated equipment to control the spread of contamination during waste handling and disposal. The author observed an example where waste which had been disposed of 14 years previously at the Savannah River Plant (a humid environment) was exhumed and examined. The waste material which had been disposed in plastic bags was still intact. In some cases the writing on paper within the plastic bags was still legible. The authors were concerned that at some indefinite time in the future, an individual could potentially dig into the disposed waste to retrieve an artifact either for its archeologic value or to make some use out of it. The authors concluded that it may be desirable to place potentially useful items in a degradable wrapping which would be adequate for handling and disposal but would quickly degrade in soil. The wrapped waste material would then tend to degrade, which would reduce its value as a potential artifact. As the authors state (Ref. 5):

> This indicated that the goal of providing improved packages to slow the migration of transuranics from the burial ground may be undesirable. The analyses that we have done indicate that the problem of movement from the area by leaching or erosion is much lower than the problem of artifacts remaining. This has led to the conclusion that degradable packages are of lower potential hazard than packages designed for long-time containment.

These conclusions, however, can be viewed differently. Assuming that a waste form and package is allowed to quickly degrade so that the waste radionuclides are "diluted," then the only way that dilution of the waste could occur is by high ground-water infiltration which would leach the radionuclides out of the waste, dispersing them in the soil. Such an action trades a hypothetical exposure to a few individuals intruding into the disposal facility for a fairly certain increased level of potential exposure to populations through increased potential for ground-water migration. The potential for exposures from one pathway would be increased while theoretically another pathway would be reduced. (As discussed in Chapter 5, this would also lead to increased long-term costs by the site owner for care and maintenance of the closed disposal facility.) Even under very extreme ground-water infiltration and leaching conditions, however, carried out for hundreds of years, almost all of the radionuclides would still be in the immediate disposal facility location. (This would be particularly true for the heavy metals.) Given the decomposition of the waste form and packages that would be allowed to occur, the radionuclides would actually be in a form which could be more readily dispersed into respirable particles or taken up by plant roots. Rather than decreasing potential intruder

exposures, degradable waste packages and forms could increase such exposures, both in the likelihood that intrusion scenarios such as housing construction would occur (see Section 4.3.4.3) and in the impacts that could result if the intrusion scenarios do occur. Furthermore, the potential for ground-water migration would be increased.

In the unlikely event that the facility is intruded into by an artifact hunter or for archeological purposes, improved waste forms and packages would also reduce potential impacts. The less degradation of waste forms that occur, the less exposures would be received by the artifact hunter while searching for the artifact. Assuming for the moment that a potentially valuable artifact was located and some time was subsequently spent polishing the artifact, then the less the artifact was degraded or corroded, the less the likelihood of respirable particles flying off. In addition, less time would be spent polishing the artifact. Even though ancient waste dumps are often inspected by current archeologists to acquire information about past civilizations, such investigation is done because the recordkeeping abilities of past civilizations was frequently poor and there is frequently little other way to acquire such information. The ability for civilization to maintain information has drastically improved and it is unlikely that future archeologists would need to exhume disposed waste to study our civilization. Archeology is a painstaking science and articles are not just dug up. Considerable research is generally performed to relate objects discovered with other records or information regarding the era. Assuming that a potentially valuable artifact is discovered, then some investigation would be required by the artifact hunter to confirm the value. This increases the chances that the potential hazard would be discovered.

The potential for waste form to reduce intruder impacts can also be illustrated numerically. To do so, NRC analyzed two cases: a "waste form credit case" and a "waste form no-credit case."

In the "waste form credit case," the degree to which radionuclides are dispersed from waste or are taken up by plant roots is assumed to be a function of waste form. For example, resins solidified in a synthetic polymer would be expected to be less leachable and less dispersible than dewatered resins. The relative degree to which wastes can be dispersed from waste is given by the following equation:

$$f_w = 10^{(I5-3)} \times 10^{(1-I9)}, \text{ where}$$

f_w is the waste form and package factor for dispersion;

I5 is the dispersibility index; and

I9 is the accessibility index.

The relative degree to which wastes may be taken up by plant roots is given by the following equation:

$f_w = M_o \times 10^{(1-I9)} \times \text{Mult}\ (I6,I7,I9)$ where,

f_w is the waste form and package factor for exposures through the food pathway;

M_o is the leach fraction of unsolidified wastes; and

Mult (I6,I7,I9) is the reduction due to solidification and the presence or absence of chelating chemicals which is characterized by the leachibility index (I6), chemical content index (I7), and whether waste streams containing chelating or chemical agents have been segregated from other wastes during disposal (the segregation index, IS).

The description of the derivation and use of these equations is given in Appendix G, and they indicate a reduction in dispersion and plant uptake depending upon waste form. It is believed that the above types of relationships assumed are reasonable; however, it is difficult to give precise values to the parameters or to say with certainty that the relationships will hold over long time periods. Nonetheless, they can be used to estimate a level of hazard from potential inadvertent intrusion given credit for a stable, nondispersible, low leaching waste form.

In the waste form no-credit case, which was the case assumed for all the previous analyses in this chapter, no credit is assumed to be taken for waste form in reducing plant uptake and airborne dispersion. Except for activated metals, the waste is assumed to disperse in a similar manner as soil. No credit is given for improvements in waste leaching characteristics to reduce plant uptake or airborne dispersion.

4.3.4.2 Analysis of Impacts

Tables 4.13 and 4.14 present a summary of potential inadvertent intruder exposures to whole body and bone as a function of time and waste spectrum, assuming that all 36 waste streams are uniformly mixed together and randomly disposed within the reference disposal facility trenches. Table 4.13 presents the "credit case" and Table 4.14 presents the "no-credit case." The time periods indicate the active institutional control period following the termination of the disposal facility license, which for this analysis is assumed to immediately follow a 2-year closure period.

The potential hazards (in mrem/yr) shown are summed over all 23 radionuclides considered in the analysis and volume averaged over all 36 waste streams, and are again shown for the two intruder scenarios--i.e., the "intruder-construction" scenario and the "intruder-agriculture" scenario. These potential hazard levels are calculated based upon a mixture of all waste streams having a range of activities. No cost or other impact data was calculated for this part of the analysis due to the narrow range of the question being addressed and the number of alternatives considered.

As shown in Table 4.13 for the credit case, the potential exposures for all four spectra drop off as a function of time due to decay of the radioisotopes

Table 4.13 Summary of Potential Intruder Exposure to Whole Body and Bone From 36 Waste Streams (Credit Case)

(mrem)

	Spectrum 1		Spectrum 2		Spectrum 3		Spectrum 4	
	Body	Bone	Body	Bone	Body	Bone	Body	Bone
YR = 50.*								
INT CONS**	4.875E+03	4.880E+03	6.160E+03	6.163E+03	1.010E+04	1.010E+04	2.099E+04	2.099E+04
INT AGRI	6.335E+03	5.914E+03	8.070E+03	7.375E+03	1.305E+04	1.205E+04	2.711E+04	2.504E+04
YR = 100.								
INT CONS	1.408E+03	1.412E+03	1.763E+03	1.765E+03	2.921E+03	2.924E+03	6.070E+03	6.077E+03
INT AGRI	1.708E+03	1.711E+03	2.139E+03	2.114E+03	3.529E+03	3.489E+03	7.333E+03	7.251E+03
YR = 150.								
INT CONS	4.585E+02	4.621E+02	5.766E+02	5.788E+02	9,505E+02	9.535E+02	6.070E+03	6.077E+03
INT AGRI	5.476E+02	5.581E+02	6.872E+02	6.931E+02	1.131E+03	1.137E+03	2.350E+03	2.363E+03
YR = 200.								
INT CONS	1.588E+02	1.621E+02	2.019E+02	2.039E+02	3.283E+02	3.311E+02	6.823E+02	6.881E+02
INT AGRI	1.889E+02	1.944E+02	2.398E+02	2.441E+02	3.895E+02	3.945E+02	8.095E+02	8.198E+02
YR = 300.								
INT CONS	3.282E+01	3.575E+01	4.411E+01	4.597E+01	6.699E+01	6.954E+01	1.392E+02	1.445E+02
INT AGRI	3.892E+01	4.136E+01	5.234E+01	5.455E+01	7.933E+01	8.181E+01	1.649E+02	1.700E+02
YR = 400.								
INT CONS	1.855E+01	2.120E+01	2.593E+01	2.766E+01	3.749E+01	3.986E+01	7.790E+01	8.284E+01
INT AGRI	2.196E+01	2.375E+01	3.077E+01	3.239E+01	4.435E+01	4.605E+01	9.216E+01	9.570E+01
YR = 500.								
INT CONS	1.562E+01	1.805E+01	2.196E+01	2.360E+01	3.150E+01	3.374E+01	6.545E+01	7.011E+01
INT AGRI	1.848E+01	1.999E+01	2.606E+01	2.742E+01	3.725E+01	3.860E+01	7.740E+01	8.021E+01
YR = 1000.								
INT CONS	9.865E+00	1.169E+01	1.381E+01	1.516E+01	1.990E+01	2.176E+01	4.135E+01	4.523E+01
INT AGRI	1.169E+01	1.278E+01	1.640E+01	1.741E+01	2.352E+01	2.444E+01	4.887E+01	5.078E+01
YR = 2000.								
INT CONS	5.77E+00	7.275E+00	8.139E+00	9.285E+00	1.186E+01	1.345E+01	2.465E+01	2.795E+01
INT AGRI	6.982E+00	7.840E+00	9.691E+00	1.054E+01	1.401E+01	1.477E+01	2.911E+01	3.068E+01

*"YR = " means number of years following termination of the disposal facility license.

**"INT-CONS" means intruder-construction scenario.
"INT-AGRI" means intruder-agriculture scenario.

Table 4.14 Summary of Potential Intruder Exposures to Whole Body and Bone From 36 Waste Streams (No-Credit Case)

(mrem)

	Spectrum 1		Spectrum 2		Spectrum 3		Spectrum 4	
	Body	Bone	Body	Bone	Body	Bone	Body	Bone
YR = 50.*								
INT CONS**	4.983E+03	6.753E+03	6.316E+03	8.849E+03	1.032E+04	1.390+04	2.144E+04	2.889E+04
INT AGRI	6.461E+03	6.995E+03	8.280E+03	9.044E+03	1.335E+04	1.443E+04	2.774E+04	3.000E+04
YR = 100								
INT CONS	1.502E+03	3.095E+03	1.899E+03	4.179E+03	3.113E+03	6.340E+03	6.469E+03	1.317E+04
INT AGRI	1.769E+03	4.482E+03	2.235E+03	3.255E+03	3.667E+03	5.111E+03	7.619E+03	1.062E+04
YR = 150.								
INT CONS	5.454E+02	2.019E+03	7.012E+02	2.811E+03	1.127E+03	4.111E+03	2.342E+03	8.544E+03
INT AGRI	5.891E+02	1.210E+03	7.492E+02	1.639E+03	1.219E+03	2.478E+03	2.534E+03	5.149E+03
YR = 200.								
INT CONS	2.400E+02	1.623E+02	3.183E+02	2.299E+03	4.931E+02	3.295E+03	1.025E+03	6.847E+03
INT AGRI	2.233E+02	7.881E+02	2.898E+02	1.098E+02	4.606E+02	1.604E+03	9.571E+02	3.334E+03
YR = 300.								
INT CONS	1.058E+02	1.362E+03	1.487E+02	1.947E+03	2.150E+02	2.759E+03	4.467E+02	5.733E+03
INT AGRI	6.818E+01	5.725E+02	9.437E+01	8.163E+02	1.389E+02	1.160E+03	2.886E+02	2.411E+03
YR = 400.								
INT CONS	8.558E+01	1.255E+03	1.220E+02	1.796E+03	1.735E+02	2.542E+03	3.604E+02	5.282E+03
INT AGRI	4.869E+01	5.168E+02	6.911E+01	7.392E+02	9.867E+01	1.046E+03	2.050E+02	2.175E+03
YR = 500.								
INT CONS	7.808E+01	1.183E+03	1.115E+02	1.693E+03	1.582E+02	2.396E+03	3.287E+02	4.978E+03
INT AGRI	4.336E+01	4.851E+02	6.175E+01	6.942E+02	8.781E+01	9.823E+02	1.825E+02	2.041E+03
YR = 1000.								
INT CONS	5.869E+01	9.769E+02	8.378E+01	1.398E+03	1.189E+02	1.979E+03	2.471E+02	4.112E+03
INT AGRI	3.112E+01	3.980E+02	4.427E+01	5.694E+02	6.301E+01	8.058E+02	1.309E+02	1.674E+03
YR = 2000.								
INT CONS	4.491E+01	8.264E+02	6.407E+01	1.183E+03	9.100E+01	1.674E+03	1.891E+02	3.478E+03
INT AGRI	2.251E+01	3.347E+02	3.195E+01	4.788E+02	4.556E+02	6.776E+02	9.466E+01	1.408E+03

*"YR =" means number of years following termination of the disposal facility license.

**"INT-CONS" means intruder-construction scenario.
"INT-AGRI" means intruder-agriculture scenario.

within the waste. For example, intruder-agriculture bone doses range across the 4 spectra from about 1.7 to 7.3 rems at 100 years but fall to a range of only 20 to 80 millirems at 500 years. In only 400 years, potential exposure levels drop by 2 orders of magnitude. Thereafter, the rate that potential exposure levels drop is much less significant--e.g., about a factor of two from 500 years to 1000 years and another factor of about two from 1000 years to 2000 years.

In addition, it may be observed that potential exposures generally increase from waste spectrum 1 to waste spectrum 4. For each successive waste spectra, a number of the waste streams are subjected to more extensive volume reduction techniques and increasingly improved waste solidification techniques are employed. For example, in waste spectrum 1 no special effort is made to compact trash. However, combustible trash is compacted in waste spectrum 2 and incinerated in waste spectra 3 and 4. As another example, ion exchange resins are assumed to be dewatered in waste spectrum 1, solidified in waste spectra 2 and 3, and calcined and solidified in waste spectrum 4. The increased use of volume reduction techniques on the waste streams results in an overall increase in the concentration of radionuclides in the disposal facility, leading to higher potential exposures. However, since it is not practical to subject all streams to extensive volume reduction, the total potential exposures only rises by a factor of four from spectrum 1 to spectrum 4. (Even under extensive volume reduction assumptions there are still a number of low activity waste streams which "dilute" the higher activity waste streams.)

The improved waste forms assumed from one spectrum to the next tend to help mitigate the effects of the increased radionuclide concentrations. In the no-credit case, the approximate factor of four difference is still observed in potential inadvertent intruder exposures between spectrum 1 and spectrum 4. However, the level of exposures for all four spectra is higher for the no-credit case than for the credit case. The rate at which potential exposures drop is also much less for the no-credit case than for the credit case. For example, the potential intruder-construction exposures at 500 years are about two orders of magnitude higher in Table 4.14 than in Table 4.13. This is due to the fact that initially, most of the potential exposures are from direct gamma radiation from such isotopes as Cs-137 or Co-60. Except for some additional self-shielding achieved by solidification in cement and the somewhat decreased radionuclide concentrations resulting from solidification, improvements in waste form have little effect on reducing the direct gamma radiation component of the calculated hazard. However, most of these potential gamma exposures would be caused by relatively short-lived isotopes, and as shown in Table 4.13, these decay after a few hundred years to relatively low levels.

As the shorter-lived gamma-emitting isotopes decay away, the most significant exposures are caused by longer-lived isotopes which generally contribute to the exposures through inhalation and food pathways. (An exception is Nb-94, which is a long-lived gamma-emitting isotope.) For example, exposures from I-129 or Tc-99 would be generally contributed through food pathways while exposures from transuranics would be generally contributed through inhalation pathways. The potential exposures from Sr-90, which is relatively short-lived (28-year half-life), would also be mainly contributed by the food pathway.

As a further illustration, Tables 4.15 and 4.16 are included which provide waste form credit example impacts for BWR ion exchange resins. Table 4.15 illustrates exposures to whole body and bone while Table 4.16 illustrates exposures to thyroid. Tables 4.15 and 4.16 may be compared against the respective waste form no-credit cases in Tables 4.4 and 4.5. Comparing Table 4.4 with Table 4.15, it appears that although some reduction in exposures for the waste form credit case are evident, the reduction is not particularly high. This is because exposures to whole body and bone are mainly dominated by direct gamma radiation, and the reduction in dispersibility and plant uptake illustrated by the waste form credit case (Table 4.15) has no effect on the radiation levels. Taking credit for waste form has more effect on potential exposures to the thyroid, since much of the thyroid exposure is due to ingestion of I-129 and reduced leaching would result in reduced uptake by plants. For waste spectrum 3, for example, calculated thyroid exposures after 400 years are reduced from the no-credit case by a factor of about 6.

Thus, the credit given to the waste form in reducing dispersion, inhalation, and plant uptake would appear to result in less significant reduction in impacts during the first few 100 years, but lead to reduced impacts over the next several hundred years. During the first few hundred years, the exposures are predominantly due to direct gamma radiation exposure from shorter-lived gamma-emitting nuclides. During the next few 100 years, the shorter-lived nuclides decay, and exposures are principally due to inhalation and ingestion of the longer-lived radionuclides. The actual values of the results are recognized to be uncertain, but do indicate that improved waste forms and packaging would help to reduce potential intruder exposures.

Before analyzing the cost and benefits of improved stable waste forms in detail, the need for placing wastes into stable waste forms and the long-term effectiveness of stable waste forms should first be evaluated. The need for placing wastes into stable forms is reviewed in the next subsection which addresses the second aspect of improved waste forms--i.e., the reduction in the likelihood of inadvertent intrusion.

4.3.4.3 Reduction in the Likelihood of Inadvertent Intrusion

The two intruder scenarios analyzed both contain one very large assumption--that the soil/waste mixture in which construction or agriculture takes place is more or less indistinguishable from dirt. That is, the waste has decomposed to the point that the intruder does not know he is contacting waste. This assumption is necessary since without it, the scenarios could not happen. Wastes currently being sent to disposal facilities cover a wide variety of forms and contained activities. About 60 percent of the volume of the waste in waste spectrum 1 that is assumed to be disposed in the reference disposal facility consists of miscellaneous trash which is relatively unstable in that it decomposes, degrades, and compresses rapidly. It is conceivable that after several hundred years, such wastes streams would be decomposed to the point where construction or agricultrual activities could take place without a potential inadvertent intruder realizing that something was wrong (i.e., that he was digging into something other than soil). In addition, such waste streams are unstable and their decomposition can lead to slumping and subsidence of disposal cell covers

Table 4.15 Potential Intruder Exposures to Whole Body and Bone for BWR Ion-Exchange Resins (Credit Case)

(mrem)

	Spectrum 1		Spectrum 2		Spectrum 3		Spectrum 4	
	Body	Bone	Body	Bone	Body	Bone	Body	Bone
YR = 50.								
REC CONS	6.196E+04	6.196E+04	3.004E+04	3.004E+04	3.098E+04	3.098E+04	5.576E+05	5.576E+05
REC AGRI	7.341E+04	7.354E+04	3.558E+04	3.560E+04	3.669E+04	3.669E+04	6.603E+05	6.604E+05
YR = 100.								
REC CONS	1.930E+04	1.930E+04	9.356E+03	9.356E+03	9.648E+03	9.648E+03	1.737E+05	1.737E+05
REC AGRI	2.286E+04	2.290E+04	1.108E+04	1.109E+04	1.143E+04	1.143E+04	2.057E+05	2.057E+05
YR = 150.								
REC CONS	6.085E+03	6.086E+03	2.951E+03	2.951E+03	3.043E+03	3.043E+03	5.477E+04	5.477E+04
REC AGRI	7.210E+03	7.223E+03	3.495E+03	3.497E+03	3.603E+03	3.604E+03	6.486E+04	6.487E+04
YR = 200.								
REC CONS	1.923E+03	1.923E+03	9.325E+02	9.326E+02	9.617E+02	9.617E+02	1.731E+04	1.731E+04
REC AGRI	2.279E+03	2.284E+03	1.104E+03	1.105E+03	1.139E+03	1.139E+03	2.050E+04	2.050E+04
YR = 300.								
REC CONS	1.989E+02	1.989E+02	9.642E+01	9.646E+01	9.943E+01	9.943E+01	1.790E+03	1.790E+03
REC AGRI	2.358E+02	2.373E+02	1.142E+02	1.145E+02	1.178E+02	1.179E+02	2.120E+03	2.120E+03
YR = 400.								
REC CONS	2.764E+01	2.770E+01	1.340E+01	1.344E+01	1.382E+01	1.382E+01	2.487E+02	2.488E+02
REC AGRI	3.299E+01	3.389E+01	1.591E+01	1.606E+01	1.637E+01	1.640E+01	2.947E+02	2.951E+02
YR = 500.								
REC CONS	1.060E+01	1.066E+01	5.142E+00	5.176E+00	5.300E+00	5.303E+00	9.540E+01	9.545E+01
REC AGRI	1.280E+01	1.353E+01	6.125E+00	6.245E+00	6.284E+00	6.307E+00	1.131E+02	1.134E+02
YR = 1000.								
REC CONS	8.532E+00	8.571E+00	4.137E+00	4.161E+00	4.265E+00	4.267E+00	7.667E+01	7.680E+01
REC AGRI	1.034E+01	1.089E+01	4.934E+00	5.025E+00	5.058E+00	5.075E+00	9.102E+01	9.126E+01
YR = 2000.								
REC CONS	8.213E+00	8.240E+00	3.982E+00	3.999E+00	4.106E+00	4.107E+00	7.390E+01	7.393E+01
REC AGRI	9.845E+00	1.042E+01	4.748E+00	4.826E+00	4.869E+00	4.884E+00	8.762E+01	8.782E+01

Table 4.16 Potential Intruder Exposures to Thyroid for BWR Ion Exchange Resins (Credit Case)

	(mrem)			
	Spectrum 1	Spectrum 2	Spectrum 3	Spectrum 4
YR = 50.				
INT CONS	6.196E+04	3.004E+04	3.098E+04	5.576E+05
ING AGRI	7.344E+04	3.558E+04	3.669E+04	6.604E+05
YR = 100.				
INT CONS	1.930E+04	9.356E+03	9.648E+03	1.737E+05
INT AGRI	2.292E+04	1.109E+04	1.143E+04	2.057E+05
YR = 150.				
INT CONS	6.085E+03	2.951E+03	3.043E+03	5.477E+04
INT AGRI	7.276E+03	3.505E+03	3.605E+03	6.490E+04
YR = 200.				
INT CONS	1.923E+03	9.325E+02	9.617E+02	1.731E+04
INT AGRI	2.347E+03	1.115E+03	1.141E+03	2.054E+04
YR = 300.				
INT CONS	1.989E+02	9.643E+01	9.943E+01	1.790E+03
INT AGRI	3.050E+02	1.247E+02	1.199E+02	2.158E+03
YR = 400.				
INT CONS	2.767E+01	1.342E+01	1.382E+01	2.488E+02
INT AGRI	1.022E+02	2.642E+01	1.854E+01	3.336E+02
YR = 500.				
INT CONS	1.063E+01	5.160E+00	5.302E+00	9.543E+01
INT AGRI	8.203E+01	1.664E+01	8.449E+00	1.521E+02
YR = 1000.				
INT CONS	8.563E+00	4.156E+00	4.266E+00	7.680E+01
INT AGRI	7.957E+01	1.545E+01	7.222E+00	1.300E+02
YR = 2000.				
INT CONS	8.245E+00	4.001E+00	4.107E+00	7.393E+01
INT AGRI	7.918E+01	1.526E+01	7.033E+00	1.266E+02

at the disposal facility, increasing rainfall percolation into the disposal facility, and further accelerating waste decomposition.

Other wastes, however, are composed of more stable material such as liquids solidified into concrete. If such wastes are indiscriminately mixed with compressible wastes, then it is conceivably possible that construction and agriculture activities could take place without the inadvertent intruder realizing that something was wrong. Such stable waste streams may be sufficiently dispersed through the waste that the presence of an odd lump or two would be ignored. In addition, a higher level of decomposition of the stable waste would be expected due to disposal of the stable waste with the unstable waste.

If, on the other hand, the stable wastes were segregated from the easily degradable wastes, then the potential for degradation of the stable waste would be greatly decreased. Even after several hundred years, the waste mass should still be clearly recognizable as something other than ordinary dirt. It is not credible to suppose that an individual would attempt to construct a house on or grow crops in a location characterized by large stacked metal cylinders filled with concrete. For such cases, exposures would be confined to those received during discovery of the disposed waste. Upon discovery, it is reasonable to expect that the intruder would cease operations while the matter would be investigated. As discussed below under institutional controls (Section 4.3.8), all knowledge about a disposal facility should not be lost and information about the facility would be assessed in determining a proper course of action with respect to the inadvertent intruder. If the individual chose to ignore information about the facility, the event would no longer be considered inadvertent intrusion.

Potential inadvertent intruder hazards were calculated for the base case based upon an assumption that all waste streams are randomly mixed together during disposal. Due to the slumping, subsidence, and higher infiltration that would be associated with this disposal practice, rapid waste degradation could occur. As just discussed, however, if the wastes were placed into a stable form or package and were also segregated and disposed of in separate disposal cells so that waste degradation would be minimized, then the likelihood of inadvertent intrusion would be greatly reduced. It is not credible to suppose that such activities as housing construction or gardening could take place under these conditions since the inadvertent intruder would contact hunks of waste and realize that something is wrong. Potential exposures would be limited to those received during discovery of the waste. As an illustration, Table 4.17 may be compared with Table 4.18. Table 4.17 was prepared by removing the decontamination resin and sources waste streams (L-DECONRS and N-SOURCES) and dividing the remaining 34 streams into two groups: a "high activity" group and a "low activity" group. The high activity group is composed of LWR process wastes (group 1), PWR and BWR noncompactible trash, and the remaining 5 waste streams in group 4. Waste spectrum 2 is assumed, for which all of the waste streams in the high activity group have been placed into a stable form which will resist rapid decomposition. The low activity group is composed of the

Table 4.17 Potential Hazard to Whole Body and Bone for Two Groups Without Segregation for Waste Spectrum 2

	Waste Form Credit Case				Waste Form No-Credit Case			
	High Activity Group		Low Activity Group		High Activity Group		Low Activity Group	
	Body	Bone	Body	Bone	Body	Bone	Body	Bone
YR = 50.								
INT CONS	1.142E+04	1.142E+04	9.824E+01	9.862E+01	1.143E+04	1.147E+04	9.833E+01	9.930E+01
INT AGRI	1.537E+04	1.363E+04	1.322E+02	1.576E+02	1.571E+04	1.501E+04	1.326E+02	1.586E+02
YR = 100.								
INT CONS	3.464E+03	3.464E+03	2.989E+01	3.004E+01	3.467E+03	3.491E+03	2.994E+01	3.050E+01
INT AGRI	4.219E+03	4.138E+03	3.879E+01	4.815E+01	4.317E+03	4.546E+03	3.887E+01	4.858E+01
YR = 150.								
INT CONS	1.094E+03	1.094E+03	9.456E+00	9.530E+00	1.095E+03	1.113E+03	9.485E+00	9.912E+00
INT AGRI	1.304E+03	1.309E+03	1.224E+01	1.565E+01	1.333E+03	1.433E+03	1.227E+01	1.589E+01
YR = 200.								
INT CONS	3.470E+02	3.471E+02	3.020E+00	3.072E+00	3.481E+02	3.632E+02	3.043E+00	3.412E+00
INT AGRI	4.120E+02	4.172E+02	4.011E+00	5.596E+00	4.208E+02	4.582E+02	4.029E+00	5.774E+00
YR = 300.								
INT CONS	3.763E+01	3.775E+01	3.526E-01	3.935E-01	3.847E+01	5.100E+01	3.717E-01	6.849E-01
INT AGRI	4.470E+01	4.669E+01	6.289E-01	1.500E+00	4.578E+01	5.544E+01	6.410E-01	1.640E+00
YR = 400.								
INT CONS	6.894E+00	6.998E+00	8.690E-02	1.238E-01	7.614E+00	1.862E+01	1.037E-01	3.826E-01
INT AGRI	8.216E+00	9.161E+00	2.932E-01	1.086E+00	8.611E+00	1.441E+01	3.039E-01	1.210E+00
YR = 500.								
INT CONS	3.810E+00	3.904E+00	5.958E-02	9.376E-02	4.450E+00	1.434E+01	7.455E-02	3.268E-01
INT AGRI	4.546E+00	5.048E+00	2.570E-01	1.030E+00	4.850E+00	9.478E+00	2.669E-01	1.143E+00
YR = 1000.								
INT CONS	3.336E+00	3.400E+00	5.302E-02	7.902E-02	3.740E+00	1.041E+01	6.247E-02	2.333E-01
INT AGRI	3.973E+00	4.084E+00	2.384E-01	9.597E-01	4.172E+00	7.013E+00	2.458E-01	1.040E+01
YR = 2000.								
INT CONS	3.171E+00	3.213E+00	4.988E-02	7.011E-02	3.411E+00	7.879E+00	5.543E-02	1.692E-01
INT AGRI	3.776E+00	3.861E+00	2.149E-01	8.531E-01	3.907E+00	5.838E+00	2.204E-01	9.092E-01

remaining 20 waste streams, including the remaining trash streams and the streams composing group 3. The low activity stream is composed of compressible waste forms which easily degrade and can lead to trench subsidence. Table 4.18 shows the potential hazard of the same high activity waste assuming that it is disposed of in a segregated manner from the low activity group. In this case, the intruder-agriculture scenario does not occur and the hazard is calculated based upon a small number of hours during which the inadvertent intruder is exposed through the assumed discovery scenario. Comparing Table 4.17 with Table 4.18, the difference in potential impacts is striking.

Table 4.18 Potential Hazard to Whole Body and Bone for High Activity Group with Segregation (Waste Spectrum 2)

	Waste Form Credit		Waste Form No-Credit	
Year	Body	Bone	Body	Bone
50	1.37E+2	1.37E+2	1.37E+2	1.38E+2
100	4.16E+1	4.16E+1	4.16E+1	4.19E+1
150	1.31E+1	1.31E+1	1.31E+1	1.34E+1
200	4.16E+0	4.17E+0	4.18E+0	4.36E+0
300	4.52E-1	4.53E-1	4.62E-1	6.12E-1
400	8.27E-2	8.40E-2	9.14E-2	2.23E-1
500	4.57E-2	4.68E-2	5.34E-2	1.72E-1
1000	4.00E-2	4.08E-2	4.49E-2	1.25E-1
2000	3.81E-2	3.86E-2	4.09E-2	9.45E-2

The costs and impacts of placing the higher activity wastes into a stable form and disposing of them in separate segregated disposal cells is analyzed in detail in Chapter 5 as well as other alternatives evaluated by NRC to achieve long-term stability. Rather than repeating the analysis here, the reader is referred to Chapter 5.

4.3.4.4 Effectiveness of Stable Waste Form

One last issue remains--i.e., how long is it necessary to rely on the stable waste form?

If the disposal cell is stabilized so that minimum infiltration is introduced to the disposal cell, then the waste form should be effective against intrusion for several hundred years. It is not reasonable, however, to expect this to be the case indefinitely. From Table 4.18 one can see that after several hundred years (i.e., on the order of 500 years), most of the shorter-lived radionuclides will have decayed away, leaving the longer-lived radionuclides. The reduction in hazard after 500 years takes place at a much slower rate. It would appear, then, that for most wastes, a limit of 500 years would appear to be the maximum reasonable upper bound. Attempting to reduce intruder impacts through waste form beyond 500 years would for most wastes really not accomplish much in the way of additional protection. In addition, the period of time upon which institutional controls are relied upon will also effect the long-term stability of waste. After institutional control ceases a higher rate of infiltration into disposal cells could occur leading to an increased rate of waste decomposition.

4.3.5 Engineered and Natural "Intruder Barriers" Created Through Facility Design and Operations

Another method by which the hazard to a potential intruder may be reduced is to dispose of the waste in a manner that would make it more difficult for a potential intruder to contact the waste--that is, by placing one or more natural or engineered barriers between the waste and the intruder. The majority of the waste streams that could require disposal by methods that provide protection against inadvertent intrusion would probably also be characterized by high surface radiation levels. Some wastes having high surface radiation levels may be dominated by short-lived isotopes, and therefore may not be of significant concern to a potential future inadvertent intruder. However, the temporarily high radiation levels associated with such wastes would still require additional care during waste handling and disposal operations. It is useful, therefore, to consider a number of potential waste disposal concepts which may offer increased protection against the actions of a potential inadvertent intruder, while at the same time offer increased worker radiation protection during waste handling and disposal operations.

Typically, only a small fraction (about 10%) of the packages received at commercial radioactive waste disposal facilities would be characterized by elevated exposure rates (e.g., greater than 5 R/hr). These wastes pose some restrictions on operations at disposal facilities. At the present time, most high exposure rate ("hot") waste is dealt with on a case-by-case basis. For example, optimal locations for shielding in trenches are often reserved for high exposure rate waste packages. Optimal locations in trenches can include corner locations and positions between waste packages having low activity levels. Additionally, rapid partial backfilling of high exposure rate packages may be employed to reduce radiation levels to acceptable working levels.

Special "hot" waste disposal cells have been employed from time to time at some of the commercial disposal facilities, as well as at some of the U.S. Department of Energy radioactive waste disposal facilities. The types of disposal cells that have been employed for disposal of high exposure rate waste packages have included slit trenches, caissons, reinforced concrete

culvert pipes, concrete walled trenches, auger holes, and toner tubes (a specific type of caisson with a basket funnel for introducing waste packages). These disposal cells serve to provide shielding protection from the high radiation fields associated with hot waste packages.

NRC analyzed a number of such potential barriers to an intruder and these are described in detail in Appendix F. The barriers considered and additional costs are shown in Table 4.19. These costs are for facility design and operation and do not include costs for long-term care. In general, the barriers can be grouped into three major categories as follows:

Table 4.19 Summary of Incremental Barrier Costs For Facility Design and Operation

	Additional Disposal Costs		
Type of Barrier	$/m^3	$/ft^3	Note
No barrier	0	0	*
Thicker cap - 3m of soil	1.59	0.05	*
Thicker cap - 3m of compacted clay	10.89	0.31	*
Layered waste disposal	37.73	1.07	**
Slit trench (10% of waste)	91.49	2.59	**
Caisson disposal (10% of waste)	216.45	6.13	**
Walled trench (10% of waste)	256.09	7.25	**
Walled Trench (100% of waste)	160.99	4.56	*
Grouting--cement†	60.46	1.71	*
Grouting--low-strength cement†	46.86	1.33	*
Engineered intruder barrier	59.17	1.68	*
Intermediate depth burial	53-159	1.50-4.50	*
Mined cavity	327-654	9.26-18.52	*
Ocean disposal	710-2200	20.11-62.31	*
Space disposal	2E+6	56,600	*

*Unit costs based upon 1,000,000 m^3 of waste disposed.

**Unit costs based upon volume of waste disposed by the disposal method indicated. For this table, the costs are based upon a volume of about 100,000 m^3.

†Unit costs include additional costs for stacked waste emplacement.

1. Engineered barriers including caisson disposal, walled trenches, grouting, and a special "engineered intruder barrier"; and

2. Depth of disposal including thicker trench caps, layered waste disposal, and slit trenches;

3. Other methods of disposal including intermediate depth burial, mined cavities, ocean disposal, and space disposal.

An important consideration for these and other forms of intruder barriers is whether the barriers are needed. As discussed previously, most waste streams contain relatively low levels of activity while some contain relatively high levels of activity. It would not appear to be justified to require that all waste streams would require disposal using a barrier to an intruder. For most waste streams, the potential hazard falls off rapidly with time, e.g., to levels on the order of a few millirems or less after a few hundred years. Thus, the use of such barriers would only be required for the higher activity waste streams.

4.3.5.1 Engineered Barriers

The engineered barriers analyzed included the use of caissons, walled trenches, grouting, and the use of a specially engineered intruder barrier. Caissons and walled trenches are examples of the use of "engineered structures" for waste disposal. Other possible engineered structure designs have been examined elsewhere (Ref. 8).

Each engineered barrier is described below. In general, the engineered barriers can provide an effective deterrent to an inadvertent intruder, but at relatively high cost.

Caisson Disposal

To represent the estimated costs and anticipated benefits of use of caissons, tubes, and reinforced concrete pipes for disposal of high activity waste, an example case employing reinforced concrete pipes is evaluated. In the illustrative example presented in Appendix F, each such "hot" waste disposal cell is assumed to consist of a 30-in (0.6 m) inside diameter reinforced concrete culvert pipe which is 24 ft (7.3 m) in length. These culvert pipes are inserted vertically into a slit trench which is 15 m (50 ft) in length, 1.5 m (5 ft) in width, and 8 m (26 ft) in depth.

Each slit trench can accommodate 16 of the reinforced concrete culvert pipes, which can accommodate either 55- or 83-gallon drums. Larger diameter pipes would be used for larger waste packages. As a result of the lower potential for slope failure resulting from the lateral structural support provided by the culvert pipes and the shielding provided by the concrete, the inter-trench spacing can be reduced. Therefore, each slit trench is assumed to be separated from adjacent trenches by a minimum of 1 m (3.3 ft). This results in an overall land use efficiency which is about 60 to 65% of the efficiency attained for the reference trenches (180 m x 30 m x 8 m) described in Appendix E.

In the example, costs are estimated for disposal of 10% of the waste received at the disposal facility being disposed through caisson disposal. The estimated cost differential for this option is about \$216/m^3 (\$6.13/ft^3). These costs were calculated assuming that no shoring was used to construct the caisson trenches. If such shoring were required, unit differential costs would be higher. The reduction in occupational dose afforded by this option is probably similar to that estimated for the slit trench case described below (10 to 20%).

Concrete-Walled Trench Disposal

A second type of "hot waste" disposal cell which has been employed for selected wastes in foreign countries (e.g., Chalk River, Canada) is the concrete-walled trench. For illustrative purposes, a concrete-walled trench is assumed to be constructed of reinforced concrete and to have inside dimensions of 12 m length, 3 m width, and 7 m depth. The wall thickness of the walled trench is assumed to be 0.3 m (1 ft). The dimensions of these walled trenches can be increased to be able to handle larger-sized waste packages. The walled trenches described here are capable of handling 55- and 83-gallon drums, large wooden boxes, and steel liners. All void spaces between emplaced waste packages may be filled with earth or, for increased stability and intruder protection, by a controlled density fill such as concrete or grout. Filled trenches are covered by a 1 m thick concrete cap followed by a layer of overburden graded for drainage.

The spacing between walled trenches is assumed to be a minimum of 3 m as a result of the requirements for concrete forming work. Due to the larger spacing required for this type of disposal cell and the volume lost by the wall displacement, the land use efficiency disposal cell is calculated to be less than 25% of that for the reference trench.

Differential costs are estimated for (1) an example in which 10% of the waste volume delivered to the disposal facility is assumed to be disposed in concrete walled trenches, and (2) an example in which 100% of the waste is disposed in concrete walled trenches. These differential costs are calculated in Appendix F to be about \$256/m^3 for the former example, and about \$161/m^3 for the latter example. Effects of economics of scale are apparent. Additional land use for the two examples are, respectively, 4.1 acres and 39.5 acres. Costs (for 10%) of waste disposed are seen to be higher than the caisson trench example; however, less additional land is required.

Grouting

Grouting and the use of controlled density fill would generally significantly discourage most potential intruders, although the ability to excavate controlled density fill is higher than that for regular cement. The use of low-strength cement (at a cost of \$47/m^3) would offer intruder protection but not as much as higher-strength cement at a cost of \$60/m^3. (Unit costs include costs for stacked waste emplacement.) The waste would need to be placed in layers after which each layer would be grouted. Additional time would also be required to carry out grouting operations.

Engineered Intruder Barrier

The construction of an engineered barrier to the intruder would also significantly discourage most potential inadvertent intruders. For purposes of analysis, NRC assumed such a barrier would consist of multiple layers of different materials placed on top of the waste which would provide both depth in excess of that associated with most construction and agricultural activities as well as materials such as asphalt, concrete, and cobbles that would need to be removed at a relatively high cost to carry out such activities. The cost for such a barrier is high ($59/m^3) and it would be difficult to maintain if subsidence were a problem because of the multiple layers of various materials.

4.3.5.2 Depth of Disposal

The most obvious barrier is depth of disposal. Placing the waste at greater depths would be expected to remove it from most of man's near-surface activities. For example, raising the thickness of the cap to approximately 3 meters would result in a thickness of approximately 4 m between ground surface and the top of the disposed waste. The alternatives considered included thicker trench caps, layered waste disposal, and slit trenches.

Thicker Disposal Cell Covers

One alternative which may be used to minimize the potential for intrusion is simply to increase the thickness of the cover over the disposal cells.

At the reference disposal facility, the waste is assumed to be emplaced to a level approximately one meter below the top of the trench. This one meter space is filled with overburden, and a cap is then emplaced which is also assumed to be one meter thick. This results in approximately 2 meters (6.6 ft) of earth between the top of the waste and the surface of the ground. This thickness of cover would probably preclude contact of the waste through most potential agricultural activities, but may still allow partial contact through such activities as construction of a basement for a house.

An additional 3 meters of overburden would raise the distance between the waste and the ground surface to about 5 meters (16.4 ft). The thickness would place the top of the disposed waste about 2 meters below the level that typical basements would be constructed (about 3 m). An earthen thickness of 3 to 5 meters would also be expected to place the waste below typical burrowing depths of many burrowing insects and animals, as well as below the root depths of many plant species--particularly many food crops.

At existing disposal facilities, disposal trenches are excavated, filled with waste, covered over with previously excavated soils, and capped. There is usually considerable excess dirt from trench excavation and this dirt is generally applied as additional overburden over the trench cap. Existing disposal facilities often have as much as 2.4 to 3.7 m (8 to 12 feet) of earth separation between the top of the disposed waste and the surface of the earth.

Based upon the assumption that additional costs for fill royalties, hauling, spreading, and compaction efforts will be accrued, it is estimated that increasing the thickness of the trench cover by 3 meters will result in an increased operational cost of about $\$11/m^3$ of waste ($\$0.31/ft^3$). This figure is based upon the assumption that the additional fill is obtained from a clay borrow area located 10 miles offsite. The cost could be substantially reduced if the additional fill is obtained from excess excavated earth. In this latter case, additional design and operational costs would be reduced to about $\$2/m^3$. Of course, the clay cap provides greater protection against percolation into the disposed waste, resulting in reduced waste decomposition and lowered ground-water migration.

In a similar vein, an increased distance between the ground surface and the top of the disposed waste could be achieved by increasing the thickness of earthen material between the top of the waste and the top of the trench. For example, if only the bottom 4 m out of the 8 m excavation were used for waste disposal, the thickness of material between the waste and the top of the trench cap would be increased to 5 m (16.4 ft). The reduction in potential intruder impacts would be equivalent to the case described above regarding increased overburden thickness, but would be brought about by decreased land use efficiency. If at the reference disposal facility only the bottom 4 m (instead of the bottom 7 m) of all disposal trenches were used for waste disposal, then the land use efficiency would be dropped from 2.9 m^3/m^2 to approximately 1.6 m^3/m^2. The land area committed to waste disposal would be raised from 87 acres to about 105 acres, and the number of disposal trenches constructed raised from 58 to 105. Due to the additional amount of trench construction, filling, grading, seeding, and other groundskeeping activities that would be performed, costs would be proportionately raised (by about $\$5/m^3$).

Layered Waste Disposal

Protection against inadvertent intrusion may be accomplished by layering of the waste according to the relative hazard of the waste. The concept of trench layering involves placement of wastes having a higher potential hazard along the bottom of the trench with wastes having a lower potential hazard emplaced on top. Typically, higher potential hazard waste generally would include waste packages characterized by high surface radiation levels or wastes that could pose a significant airborne hazard if disturbed by excavation.

Layered waste disposal would use the same trenches described in the reference disposal facility (Appendix E). In the reference facility trench, only the bottom 7 m out of the 8 m excavated is used for disposal of waste. For layered waste disposal, the bottom 2 m (6.6 ft) of the excavation is assumed to be used for disposal of higher potential hazard waste material. The remaining 3-5 m of available space is used for disposal of lower potential hazard waste material. Thus, the inadvertent intruder would have to dig through 2 m of backfill and 3-5 m of lower hazard waste before encountering waste that could result in a significant potential exposure. Excavation work that uncovered boxes and drums of low activity waste would probably discourage further excavation long before the more hazardous material were reached. Layered

waste disposal would also help to reduce personnel exposures during disposal operations, by providing additional shielding for wastes having high gamma radiation levels.

The option of layered waste disposal would not appreciably alter design, operations or labor requirements. However, there would have to be an adequate mix of lower hazard to higher hazard waste on hand to allow for successful implementation of the option (i.e., a lower hazard waste to higher hazard waste volume ratio of about 2.5 to 1 or greater). Maintaining an input of waste at this ratio could on occassion require either careful scheduling of input from waste generators, and/or implementing greater storage capability at the site. It might also be necessary to have the capability of transporting the waste from a site waste storage area. Therefore, operational changes at the disposal facility might involve temporary storage of waste, additional coordination of waste receipt and emplacement, and transport of stored waste from the storage area to the disposal trench. The only significant operational cost differences would include possible construction of an inexpensive moderately sized waste storage facility (e.g., an open-sided roofed structure intended to provide some weather protection for the stored wastes, and perhaps a storage pad with tarpolins for large packages), and the aquisition of an onsite transport vehicle (e.g., a flatbed truck). Since these high activity wastes also present greater potential for migration and the need for greater stability over the long-term as discussed in Chapter 5, the lower activity wastes used for layering should also be in a stable, noncompressible form. The estimated cost differential for this option is about $38 per m^3 of waste requiring layered disposal. No additional land would be committed to waste disposal.

Slit Trench Disposal

A slit trench typically has a length dimension which is more than 5 times the width dimension (width dimension is generally less than 5 meters). The assumed dimensions of vertical-walled slit trenches in this EIS are 20 m in length, 3 m in width, and 8 m in depth. The minimum spacing employed between slit trenches is assumed to be 2 m. The assumed disposal efficiency is 50%, which means that only 50% of the total available void space is eventually occupied by waste packages.

It is assumed that 10% of the waste volume received at the facility will require disposal using slit trenches. The assumed slit trench dimensions and spacing imply that the land use efficiency of slit trench disposal is approximately half the efficiency of the reference trenches (180 m x 30 m x 8 m) described in Appendix E (or about 4.7 ft^2/ft^3). The anticipated cost differential between the base case unit disposal cost and the near-surface disposal facility employing slit trenches for "hot" waste is about $91 per m^3 of waste disposed into slit trenches. This cost is calculated assuming that no shoring is used during slit trench construction and waste emplacement. If shoring were used--either to allow construction work inside the slit trenches or to maintain side walls during waste emplacement--then unit costs for slit trench operations would be considerably higher.

The slit trench option results in an additional 2.8 ha (7 acres) committed to waste disposal. The overall land use efficiency for this option is estimated to be 8.75 ft^3/ft^2 (mixture of regular and slit trenches). The major anticipated benefit of employing this option is a reduction in the occupational exposures received by the waste emplacement labor force at the disposal facility. It is estimated that the use of slit trenches can possibly reduce occupational exposures by between 10 and 20%. Use of slit trenches for high activity wastes would be expected to reduce potential intruder exposures by a factor of about two. A drawback to the use of these slit trenches are the moderate slope failure hazards existing for vertical-walled trenches. In addition, the restricted width dimensions of slit trenches may preclude the burial of very large waste packages.

4.3.5.3 Other Methods of Disposal

Since this EIS is limited to near-surface disposal, NRC did not analyze in detail other methods of disposal. Other methods of disposal, however, such as intermediate depth burial, mined cavities, and ocean and space disposal can be very effective against intrusion. For example, use of a mined cavity would place the waste several hundred meters below the surface of the earth--far below most activities of man. Space disposal removes the waste entirely from the earth's surface. However, both options are very expensive--i.e., $500 to $840 per cubic meter for mined cavity disposal (not including postoperational costs) and $2 million/$m^3$ for space disposal. In the case of space disposal, the technology for routine implementation of this option is not available at the present time and the potential hazards are unknown. Therefore, if space disposal were required for all low-level waste, then large quantities of low-level waste would need to be stored until the technology was fully developed. This would be extremely expensive to licensees.

Waste can also be disposed of at much deeper depths. The opportunities for doing so may be limited at most eastern disposal sites, and an intermediate depth disposal facility at a western site (an unused open-pit mine) is illustrated in Appendix F as an example. This is expected to be effective against potential intrusion but could also be expensive. The reader is referred to Appendix F for further information. With respect to mined cavity disposal, there are currently no mined cavity disposal facilities licensed to operate in the country. If all low-level waste were required to be disposed of by this method, then all waste currently being generated would have to be stored until mined cavity facilities were licensed.

4.3.6 Institutional Controls

Another mechanism for reducing potential impacts to a potential inadvertent intruder is use of institutional controls.

4.3.6.1 Background

Institutional controls are controls which require performance of some action by a governmental agency to preclude human contact with the waste, or require a continuing social order. Examples include the following:

- Access to a disposal site can be controlled to restrict entry. For example, the site can be surrounded by a fence or other barrier to human or livestock intrusion. This barrier can be posted with warnings not to intrude upon the site. In addition, the site can be under routine surveillance by regulatory and/or law enforcement agencies to assure continued integrity of the fence and to inspect for possible disturbance.

- Controlled productive use of the site surface--for example, construction of a golf course--can be carried out under regulatory agency licensed control. In such instances, access to the site can be patrolled or otherwise restricted by those licensed to use the site. Controlled productive site use could also result in income which may partially off-set administrative costs incurred by the licensed custodial agency.

- Periodic inspection of the disposal site and monitoring for potential ground-water releases can be performed by a regulatory or other governmental agency. (The act of monitoring and inspection necessarily implies an understanding of the potential hazards contained within the site.)

This period of time can be termed a period of active observation. Gradually, however, such active means of institutional controls are anticipated to decrease. The interval between inspections lengthens. As regulators move on to other concerns, gradually less time and effort is placed upon surveillance and control of a particular site.

Ultimately, institutional controls must also rely upon relatively passive means involving some manner of social order. The types of controls which would be relied upon during this passive control period can include the following:

- The location of the disposal facility as well as the location of specific disposal areas on the facility can be referenced to USGS benchmarks. Long-lasting monuments can be emplaced which contain an inscription describing the nature of the hazard.

- The location and configuration of the disposal facility, together with a description of the hazard, can be inexpensively recorded and maintained in a number of different locations on a local, county, state, and national level. This redundancy in recordkeeping would help to ensure that knowledge of the disposal facility would be retained.

- Control of the disposal facility site can be maintained by a responsible government body--that is, the federal government or the government of the state in which the site is located. Government ownership of the land minimizes the potential for possible abandonment of the site. State or federal ownership is already a requirement in existing NRC regulations in 10 CFR Part 20.

- The title to the disposal site (the deed) can contain a convenant which specifically warns of the potential hazard and specifies a restriction on the use of the land.

Probably the most significant concepts for long-term passive institutional control measures are those of control of the land by a governmental organization, land-use restrictions in the form of titles or deeds, and multiplicity of records. As civilizations have evolved over the centuries, societies have characteristically erected superstructures (governments) to perform services--for example, protection of life, health, and property--which are less conveniently performed by individuals. Among the function performed by governments are control of titles to and uses of property. Placing the long-term control of a disposal site into the hands of a government organization helps to ensure that such motivies as profit and loss do not lead to possible abandonment of the property, or sale for inappropriate uses.

Certain governmental functions, such as tax collecting, land controls, and an interest in the health and welfare of the society, are independent of the type and form of government involved. Whether the government is capitalistic or socialistic, democratic or autocratic, use of land is controlled for what is perceived to be the maximum benefit of the society. From time to time societies have altered (or have had alterations performed by outside means) their type and form of government by peaceful or violent means. Yet, these societies have merely changed the form of the government, not eliminated government altogether. The government may change but the <u>institution</u> of government does not change. Germany, for example, has within the last 60 years undergone a number of upheavals resulting in radical changes in its government. During these upheavals, temporary breakdowns in several governmental functions have occurred. However, such functions were relatively quickly resumed by the newly established governments.

In the system familiar to Western culture, land may be owned by a government, an individual, or an organization. Title to the land is expressed through deeds--which often contain restrictions or specifications on the use of the land. Legal restrictions and administrative requirements (for example, records) are imposed upon the ownership and transfer of the land. On a number of occasions, title for a particular property has remained in the same hands--that is, by a family, an organization, or a government--for several centuries.

Similarly, the title to a piece of property may change hands, but the use of the land for a particular purpose (for example, cemeteries) will remain essentially the same for very long time periods. Even for land owned and used collectively, some organization controls the title to and prescribes the use of the land. The land is used for a specified purpose (for example, farming) by a particular group of people, and the land futhermore has boundaries.

The principle of government control of a near-surface disposal facility site does not preclude productive use of the land. The surface of a near-surface disposal facility, for example, can probably be used in perfect safety, as long as the users of the land are precluded from excavating deeply into the subsurface. Indeed, controlled use of the land may be potentially encouraged as a means to collect revenues to off-set the administrative costs of exercising control.

Markers on disposal cells which provide an approximate quantification of the hazard of disposed waste can also provide a passive warning to future generations that something out of the ordinary has occurred at the site. The use of such markers is current practice at all existing disposal facilities. Typically at current sites, a disposal trench will be marked with a monument inscribed with at least the following information:

- Total activity of radioactive material, in curies, excluding source and special nuclear materials; total amount of source material in kilograms; and total amount of special nuclear material, in grams, in the trench;
- Date of filling and capping the trench; and
- Volume of waste in the trench.

Typically, the information is inscribed upon a metal plate which is mounted onto a stone. In addition, marker stones are frequently used to denote the corners of a disposal trench. Costs for such markers have been included in the costs for the reference disposal facility.

4.3.6.2 Limitations to Institutional Controls

Institutional controls such as those outlined in the preceding section can be used to protect against the actions of an inadvertent intruder. However, such institutional controls are effective only insofar as they last. Markers and monuments established at a disposal site may be stolen or defaced and the nature of the hazard may be buried in forgotten governmental files. Land-use restrictions may be potentially ignored or a future government bureaucracy may simply mistakenly release a site for inappropriate use.

It is probably not realistic, however, to assume that institutional controls would be completely lost for extended time periods. It is certainly not credible to assume that <u>all</u> knowledge of a disposal facility would be lost. As previously discussed, records of the disposal facility, including the precise locations of waste disposal cells referenced to a bench mark, may be maintained in a number of separate locations. In addition, the general location of a disposal facility would likely be maintained in any number of other records. The locations of existing disposal facilities have been described in literally thousands of newspaper and magazine articles, professional journals, and private- and government-published documents.

Taking all possible passive control measures together, it seems reasonable to expect that institutional controls may be reasonably effective indefinitely. As stated earlier, there are a number of examples of property ownership or control by an institution or organization for centuries. However, during this time period, there is a possibility of one or more occurrences where institutional controls may break down, leading to inappropriate use of the site and potential human exposures. In the extreme, such occurrences may include such activities as construction of a housing development, as was the case at Love Canal. (At Love Canal, however, houses were not constructed directly into disposed waste. Human contact with the disposed waste was caused by leaching of contaminants out of the disposed waste by ground water and movement of the contaminants through the ground water and into areas inhabited by humans).

Compared to other types of potential environmental hazards, radiation is comparatively easy to detect. Furthermore, techniques to detect radiation are certain to become more sophisticated as time goes by. Future societies will undoubtedly continue to have organizations which are concerned with the health and well-being of the society's citizens. Any type of environmental, social, or warlike event that would completely eliminate all consideration of the public health and safety (and of instruments to detect potentially harmful radionuclides) would be so calamitous in nature that the potential impacts from the disposal facility would be entirely secondary.

In addition, it is likely that if someone sometime in the future did excavate into a near-surface disposal facility site, it would occur to the person that something was out of the ordinary and he would take steps to investigate the situation. A scenario that someone may excavate into disposed waste and grow vegetables on the exposed waste necessarily incorporates a somewhat farfetched presumption that all of the waste is sufficiently decomposed so that it is homogeneously mixed with soil. As discussed earlier, as long as the waste is in a stable waste form, then extensive construction or agricultural activities are not considered credible. Even under conditions of rapid decomposition of wastes which are disposed in an unstable form, extensive construction or agricultural activities must be considered unlikely.

Still, accidents happen, and it is reasonable to assume that, after a given period of time after disposal, some temporary breakdown in institutional controls may lead to an inadvertent use of a closed disposal facility which leads to potential exposures to a few individuals. As in the case of Love Canal, this could happen not because of a conscious decision to ignore public health and safety, but because someone simply made a mistake.

The maximum time period for which active institutional controls can be relied upon to preclude inadvertent intrusion has been investigated by a number of people (Refs. 1-5, 9). In EPA's "Proposed Criteria for Radioactive Wastes, Recommendations for Federal Radiation Guidance," (as published in the Federal Register in November 1978 (43 FR 53262) (Ref. 9)), EPA proposed that a limit of 100 years should be used as a limit for the length of institutional controls. This limit was proposed based upon consideration of public input received at a number of public forums on radioactive waste disposal held by EPA.

In various studies exploring ways in which to classify radioactive waste for disposal, different institutional control periods have been used (Ref. 1-5). The institutional control periods assumed in these studies were all less than a few hundreds of years and ranged in these studies from 100 to 200 years.

The maximum time period that should be assumed for active institutional controls was discussed extensively at a series of 4 regional workshops held on the preliminary draft of the Part 61 rule. These workshops were held in Atlanta, Georgia; Denver, Colorado; Chicago, Illinois; and Boston, Massachusetts. A more detailed summary of these workshops is contained in Appendix C. The general consensus of these workshops was that a 100-year limit for active institutional controls was appropriate. NRC also quantitatively analyzed varying periods of active institutional control ranging from 50 to 300 years. This analysis was performed concurrently with that leading to selection of the preferred performance objective and is described in Section 4.5.

4.4 CONCLUSIONS AND COMPARATIVE EVALUATION OF ALTERNATIVES

In summary, there are many potential methods which could be implemented to reduce potential exposures to an inadvertent intruder. All methods would involve increased costs for disposal--some significantly. In addition, many waste streams contain very small quantities of radioactivity and it would not appear to be reasonable to require the additional expense for all waste streams, particularly considering the hypothetical nature of the intrusion scenarios. Some criteria--preferentially based upon a dose level to a few individuals--is needed to distinguish between waste streams which should be disposed with additional protection against potential intrusion and those waste streams for which this would not be necessary. Such a dose level would also establish the level of safety to assure protection of an inadvertent intruder--i.e., a performance objective for intrusion.

It also appears that for most cases, simply layering the disposed wastes would provide sufficient protection to an intruder. For some streams perhaps even more additional protection would be needed--for example, use of a walled trench. Finally, some waste streams may not be suitable for near-surface disposal.

In determining which waste streams may not be acceptable for near-surface disposal, one of the key questions is how long barriers to a potential intruder may be expected to last. Such barriers, of course, would be expected to last several hundred years but not forever. Some barriers may last longer than others. For example, the effectiveness of a "hot waste facility" (walled trench) discussed above to deter the actions of a potential intruder could be expected to last longer than the intruder barrier provided by layering. As discussed above, the "hot waste facility" is assumed to consist in this EIS of a disposal trench which has a 0.3 m thick concrete base, 0.3 m thick concrete walls, and a one-meter thick concrete cap. This trench may be then covered over with fill.

From the analyses performed for this EIS, it can be seen that due to radioactive decay, exposures to a potential inadvertent intruder from almost all waste streams typically considered to be LLW fall to a few millirems after a few hundred years--e.g., 500 years. After 500 years, only a few waste streams are estimated to result in potential intruder exposures of a few hundred millirems. Very few (e.g., one or two) streams having small volumes are estimated to result in potential intruder exposures exceeding 500 mrem after 500 years. A time period of 1,000 years was assumed for a "hot waste facility" to provide an upper estimate of the degree to which near-surface disposal techniques can reduce potential intruder exposures.

On the other hand, waste streams that are generally considered to be "high-level waste" (e.g., spent reactor fuel, solidified first solvent extraction stages from a nuclear fuel reprocessing plant) contain much higher initial levels of radioactivity. Typically, the potential hazard from high-level waste disposal is dominated by fission products over approximately the first 600 years. After that approximate time period, most of the fission-product activity has decayed, except for iodine-129 and technetium-99; radioactivity is dominated thereafter by the actinides--e.g., U, Np, Pu, Am, Cm and their daughters.

This point was recognized by NRC during development of the regulation 10 CFR 60 for geologic disposal of high-level waste. In the Federal Register Advance Notice of Proposed Rulemaking on this rule (Ref. 10), there was included a draft requirement that high-level wastes should be placed into a canister that would last for 1,000 years to allow decay of the fission products. This requirement was later included as part of the Part 60 rule proposed in July 1981 (Ref. 11). It is apparent, then, that wastes which still contain appreciable activity after several hundred years (e.g., 500 years) would appear to more closely resemble high-level waste than what is usually considered to be low-level waste.

Finally, limitations on the effectiveness of barriers to a potential inadvertent intruder was discussed at the regional workshops on the Part 61 regulation. At these workshops, there appeared to be general agreement that a time period of 500 years seemed appropriate for most easy-to-implement intruder barriers.

Based upon the analyses and discussion of the previous subsections, the following conclusions can be reached:

1. The potential for inadvertent human intrusion into a closed disposal facility at some point after closure of the disposal facility is likely. Extensive intrusion activities such as major housing or apartment construction are unlikely. The potential exposures from inadvertent intrusion are relatively high for the first few hundred years (i.e., 3-6 rem/year) but, provided a few waste streams are removed, then drop to a low level (few mrem/year).

2. Some waste streams present relatively little hazard to an inadvertent intruder. Some present an initial high potential hazard. If inadvertent intruders can be protected against contacting these latter waste streams for a few hundred years, then such waste streams present much reduced potential hazards. Some waste streams may not be acceptable for near-surface disposal.

3. The extent and consequences of potential inadvertent intrusion are related to waste form, design, and operating practices. For example, improved waste form and packaging can reduce potential exposures through inhalation and food consumption pathways. Volume reduction may increase exposures from direct gamma radiation. If the waste is in a structually stable form and segregated from other wastes, then as long as the structural stability is retained, the possibility of extensive inadvertent intrusion activities is not considered credible.

4. Natural and engineered barriers can be used to reduce potential intruder exposures. However, there is a limit (e.g., 500 years) as to how long such barriers can be expected to last.

5. Institutional controls can be effective in reducing the potential for inadvertent intrusion and in reducing potential intruder exposures.

Two aspects must be analyzed in further detail and specific limits developed to determine the disposal requirements of different LLW streams based on protection

of an inadvertent intruder--that is, to determine which streams may be acceptable for near-surface disposal, which streams may require barriers to an intruder, and which streams may be altogether unacceptable for near-surface disposal. The aspects that must be developed include:

1. An exposure guideline to define an acceptable level of safety regarding protection of an inadvertent intruder which can be used to stipulate when controls against potential intrusion should be implemented;

2. A maximum time during which active institutional controls can be relied on to prevent inadvertent intrusion; and

These two aspects and others are addressed in the remaining two sections regarding development of an intruder performance objective and technical requirements.

4.5 DEVELOPMENT OF INTRUDER PERFORMANCE OBJECTIVE

4.5.1 Analysis of Intruder Dose Limitation Guidelines

Prior to determining a dose guideline for protection of a potential inadvertent intruder, it is useful to briefly review a number of radiation exposure guidelines which have been recommended by various bodies or adopted by regulatory agencies. The reader is referred to Appendix N, which presents a brief review of radiation exposure guidelines as have been developed by the following groups:

- ICRP
- NCRP
- EPA
- NRC

From the discussion in Appendix N, it appears that a wide range of exposure criteria have been recommended by national and international committees or adopted as regulations by NRC and EPA. These criteria range from a few millirem to a few dozen millirem to several rems. In general, the lower exposure limitation criteria (a few to a few dozen mrem) are used as standards assuming continuous exposure to radionuclides by populations. Higher dose limits (hundreds of mrem) are generally used as standards assuming exposures to a few individuals in unrestricted areas. Still higher exposure limits (a few rems) are considered appropriate for limits to radiation workers. Finally, a few dozen rems is an exposure guideline which has been recommended for once-in-a-lifetime exposures for an emergency situation.

Three alternative dose guidelines may be further examined, which serve to bound a low, moderate, and high dose guideline. In considering this range, one important concept that should be remembered is that the exposures potentially experienced by an intruder would not be routine. Such exposures would be accidental and would furthermore not be expected to last for long time periods--particularly if the waste so encountered has been placed into a stable form. The three guidelines so examined are in the following ranges:

1. 25 mrem to the whole body;

2. 500 mrem to the whole body; and

3. 5 rem to the whole body.

Twenty-five mrem/year is derived from 40 CFR Part 190 and is the EPA standard applied to the whole body and organ (except thyroid) exposures involving releases of material to the general environment through normal fuel cycle facility operations. This standard has been adopted by NRC as part of NRC regulations in 10 CFR Part 20. Since this is an accepted standard, it would appear to provide an adequate level of protection. It does not appear appropriate, however, to apply this standard to exposures to potential inadvertent intruders. This standard applies to routine releases to the general environment involving exposure of several individuals of larger population groups. The standard would not seem to apply to the type of localized "accidental" exposure to a few individuals who might intrude into the waste. Inadvertent intrusion is accidental and of a short-term temporary nature and is not expected to involve longer-term routine operational releases. A limit higher than 25 mrem/year would therefore appear to be appropriate, particularly since intrusion involves only a few individuals.

Five rem/year to the whole body is derived from the occupational external whole body radiation exposure guideline recommended by NCRP and set out by NRC in 10 CFR Part 20. Since this is also a generally accepted standard, it would also seem to provide an adequate level of protection. Such an exposure to an intruder would not be life threatening, and would involve exposures no higher than allowable today for some individuals. The standard, however, is applied to radiation workers who understand and accept the low risk of exposure involved in their job and livelihood. The inadvertent intruder is not a radiation worker and he may have no knowledge of the risk of exposure even after he digs into the waste.

Dose limitations in the range of 500 millirem/year to the whole body have been recommended by various groups for a number of years as adequate for protection of individuals. In making this recommendation, these groups maintain that protecting individuals to this level will almost certainly protect populations. For example, ICRP states that protection of an individual to a level of 500 mrem/year will almost certainly guarantee potential population exposures to less than one-tenth of the maximum individual dose. The current recommendations of the National Council on Radiation Protection and Measurements (NCRP) for radiation protection guidelines are 500 mrem/year (whole body) to the maximum exposed individual and 170 millirem/year as an average yearly population dose. These recommendations were adopted by the Federal Radiation Council (FRC) and recommended in 1960 as federal guidance. NRC limits in 10 CFR Part 20 for exposures to individuals in unrestricted areas are currently set at 500 mrem/year (whole body), based upon recommendations of the FRC and NCRP.

The International Commission on Radiation Protection (ICRP) has also recommended similar limits for a number of years. In more recent recommendations, however,

ICRP has retained the recommended whole body dose limits of 500 mrem/year but dropped the 170 mrem/year population dose recommendation as not necessary. In so doing, ICRP states that protection of an individual to a level of 500 mrem/year would almost certainly guarantee potential population exposures to less than one-tenth of the maximum individual dose. ICRP also now recommends use of a weighting system to account for the fact that certain bodily organs and extremities are more radiosensitive than others. In the system, the dose to any individual organ or groups of organs would be controlled so that the sum of the doses to each individual organ times a given organ-weighting factor would not exceed 500 millirem for all organs. This weighting system, however, has not been adopted by NRC, although it may be in the future.

A dose guideline of 500 mrem/year to the whole body would therefore appear to be acceptable for protection of an inadvertent intruder. Such potential intrusion may never occur and if it should occur, would only be expected to involve local exposure of a few individuals. The use of a 500 mrem/year dose guideline has also been extensively discussed at the four regional workshops held by NRC on LLW disposal. Comments on this guideline were also received on the preliminary draft regulation 10 CFR 61 which was made available for public comment. The workshops and public comments are discussed in Appendix C. Broad acceptance of this guideline was generally expressed in these workshops and comments.

4.5.2 Analysis of Alternatives

Alternative dose limitations and institutional control periods for use in establishing performance objectives for protection of a potential inadvertent intruder may also be examined numerically. That is, depending upon different assumptions regarding dose criteria and institutional control periods, different calculated volumes of waste would require disposal by various methods. These volumes (and the resulting intruder exposures calculated) may then be examined and an estimate made of the cost-effectiveness of different alternatives.

Two factors complicate this analysis. One is that in determining performance objectives for inadvertent intrusion, one cannot examine alternative dose limitations independently of the institutional control period. For example, in order to assess the effects of alternative dose limitations, one must first set an institutional control period. Similarly, one cannot assess the effects of alternative institutional control periods without first setting a dose limitation criteria. The second factor is the number of variables which could be considered in the analysis. Some of these variables include the dose limitation criteria, the waste spectrum, the institutional control period, the region of the country, and the facility design. Several thousand permutations are possible. Even if one limits oneself to 3 alternative dose limitation criteria, 4 alternative waste spectra, 4 alternative institutional control periods, 1 region (the reference facility), and 2 facility designs, the number of possible permutations comes to 96. If one also considers the effect on the results of "waste form credit" and "no waste form credit" assumptions regarding the effect of waste form on dispersibility and root uptake, the number of possible permutations becomes 192. Clearly, some simplifying assumptions must be made to enable meaningful results.

For the analysis, therefore, NRC staff has considered 24 cases as shown in Table 4.20. In Cases 1-8, the dose limitation criteria (500 mrem whole body) and the waste spectrum (spectrum 1) are fixed, and the effects of four different institutional control periods (50, 100, 150, and 300 years) are considered. In Cases 9 through 14, the dose limitation criteria is still fixed at 500 mrem (whole body) and the effects of different waste spectra are considered. Cases 15 through 19 consider the effects of a dose limitation in the range of 25 mrem (whole body), while Cases 20 through 24 consider the effects of a dose limitation criteria in the range of 5 rem (whole body).

In each of the 24 cases, the waste streams are assumed to be randomly disposed into the reference disposal facility. Three potential forms of disposal to reduce intruder impacts are considered--i.e., disposal near the surface, layering, and not acceptable for near-surface disposal. In the 24 cases, no credit is assumed for the ability of waste form to reduce dispersibility and plant root uptake. The details of the calculational procedure are set out in Appendices G and H. Briefly, however, each waste stream is first tested for intruder impacts from disposal near the earth's surface, assuming the intruder scenarios discussed earlier occur (i.e., the intruder-construction scenario and the intruder-agriculture scenario). The calculated impacts are compared against the assumed dose limitation criteria immediately after the assumed end of the institutional control period. If the calculated impacts exceed the dose limitation, the waste stream is then assumed to be layered (disposed at the bottom of the trench), which considerably reduces the potential exposures received. However, the effectiveness of layering as an intruder barrier is assumed only to be effective for 500 years, after which time the potential impacts from intrusion are again compared against the assumed dose limitation criteria. As before, the intruder-construction and intruder-agriculture scenarios are conservatively assumed to occur. If the calculated impacts exceed the dose limitation criteria, the waste stream is assumed to be not acceptable for near-surface disposal.

The volumes of waste assumed to be suitable for disposal by each classification--i.e., regular disposal, layered disposal, or not acceptable--are shown for each case on Table 4.20. Also shown is the volume averaged intruder impacts calculated for the intruder-construction scenario and the intruder-agriculture scenario to each of two organs: whole body and bone. The impacts are calculated at the end of the institutional control period and are volume-weighted averages of exposures received from all waste streams acceptable for disposal--i.e., from regular and layered disposal. The doses calculated are an indication of the range of the actual likely exposures received from application of the indicated dose limitation criteria after the end of the indicated institutional control period. Exposures are also shown for a time period 500 years after license termination, at which time no credit is assumed for layering to reduce intruder exposures.

Finally, two different disposal facility design practices are considered in the analysis--i.e., whether or not compressible wastes are segregated from other waste streams during disposal. As discussed earlier, this can have a significant effect on the potential intruder impacts. If waste segregation is implemented, then the extensive intruder-construction scenario and intruder-agriculture scenario is assumed to be only applicable to the compressible wastes. For wastes

Table 4.20 Comparison of Cases to Determine Intrusion Performance Objective

Case Description and Impact Measures	Case												
	a	b	c	1	2	3	4	5	6	7	8	9	10
Case Description:													
Dose limitation criteria (mrem)	NA	NA (No TRU)	NA (No TRU)	500	500	500	500	500	500	500	500	500	500
Waste spectrum	1	1	1	1	1	1	1	1	1	1	1	2	2
Institutional control period (yrs)	100	100	100	50	50	100	100	150	150	300	300	100	100
Segregation (yes/no)	No	No	Yes	No	Yes	No	Yes	No	Yes	No	Yes	No	Yes
Intruder Impacts:													
Body (mrem)													
o ICP C	1.50E+3	1.21E+3	1.16E+3	8.43E+1	8.69E+1	8.05E+1	3.09E+1	3.65E+1	2.12E+1	1.28E+1	1.22E+1	4.09E+1	3.26E+1
o ICP A	1.77E+3	1.49E+3	1.41E+3	9.51E+1	7.35E+1	8.47E+1	2.50E+1	3.83E+1	2.00E+1	1.44E+1	1.37E+1	4.59E+1	2.15E+1
o 500 C	7.81E+1	1.53E+0	1.53E+0	1.53E+0	1.53E+0	1.53E+0	1.53E+0	1.53E+0	1.53E+0	1.53E+0	1.53E+0	1.93E+0	1.93E+0
o 500 A	4.34E+1	1.76E+0	1.76E+0	1.76E+0	1.76E+0	1.76E+0	1.76E+0	1.76E+0	1.76E+0	1.76E+0	1.76E+0	2.21E+0	2.21E+0
Bone (mrem)													
o ICP C	3.10E+3	1.21E+3	1.17E+3	8.89E+1	9.53E+1	8.78E+1	3.62E+1	4.31E+1	2.62E+1	1.96E+1	1.77E+1	4.57E+1	3.36E+1
o ICP A	2.48E+3	1.56E+3	1.51E+3	1.10E+2	8.51E+1	9.08E+1	2.97E+1	4.12E+1	2.20E+1	1.64E+1	1.52E+1	5.50E+1	2.61E+1
o 500 C	1.18E+3	4.52E+0	4.52E+0	4.52E+0	4.52E+0	4.52E+0	4.52E+0	4.52E+0	4.52E+0	4.52E+0	4.52E+0	6.25E+0	6.25E+0
o 500 A	4.85E+2	3.46E+0	3.46E+0	3.46E+0	3.46E+0	3.46E+0	3.46E+0	3.46E+0	3.46E+0	3.46E+0	3.46E+0	4.67E+0	4.67E+0
Volumes: (m^3)													
Regular	1.0E+6	9.80E+5	9.80E+5	6.88E+5	8.64E+5	8.81E+5	8.82E+5	9.08E+5	9.09E+5	9.77E+5	9.77E+5	4.76E+5	6.76E+5
Layered	-	-	-	2.92E+5	1.15E+5	9.91E+4	9.77E+4	7.14E+4	7.04E+4	2.66E+3	2.66E+3	2.02E+5	2.87E+3
Not accept.	-	1.94E+4	1.94E+4	1.94E+4	1.94E+4	1.94E+4	1.94E+4	1.94E+4	1.94E+4	1.94E+4	1.94E+4	1.94E+4	1.94E+4
Disposal Costs: ($)													
Design and Op.	1.85E+8	1.85E+8	1.90E+8	1.93E+5	1.95E+8	1.88E+8	1.94E+8	1.88E+8	1.94E+8	1.86E+8	1.92E+8	1.88E+8	1.88E+8
Postoperational	3.82E+7	3.82E+7	3.82E+7	3.09E+7	3.09E+7	3.82E+7	3.82E+7	4.29E+7	4.29E+7	4.88E+7	4.88E+7	3.82E+7	3.82E+7
Total NSD:	2.23E+8	2.23E+8	2.28E+8	2.24E+8	2.26E+8	2.26E+8	2.32E+8	2.31E+8	2.37E+8	2.35E+8	2.41E+8	2.26E+8	2.26E+8
Mined Cavity ($)	-	9.93E+6	9.93E+6	9.93E+6	9.93E+6	9.93E+6	9.93E+6	9.93E+6	9.93E+6	9.93E+6	9.93E+6	9.93E+6	9.93E+6
Repository ($)	-	1.01E+8	1.01E+8	1.01E+8	1.01E+8	1.01E+8	1.01E+8	1.01E+8	1.01E+8	1.01E+8	1.01E+8	1.01E+8	1.01E+8

Table 4.20 (continued)

Case Description and Impact Measures	Case 11	12	13	14	15	16	17	18	19	20	21	22	23	24
Case Description:														
Dose limitation criteria (mrem)	500	500	500	500	25	25	25	25	25	5000	5000	5000	5000	5000
Waste spectrum	2	2	3	4	1	1	2	3	4	1	1	2	3	4
Institutional control period (yrs)	300	300	100	100	100	100	100	100	100	100	100	100	100	100
Segregation (yes/no)	No	Yes	Yes	Yes	No	Yes	Yes	Yes	Yes	No	Yes	Yes	Yes	Yes
Intruder Impacts:														
Body (mrem)														
o ICP C	1.50E+1	3.94E+1	2.83E+1	3.84E+1	1.37E+0	1.90E+0	2.47E+0	3.56E+0	2.12E+0	1.15E+2	6.71E+1	3.43E+1	3.08E+1	6.41E+1
A	1.71E+1	3.43E-1	2.11E+0	4.47E+1	2.74E+0	1.74E+0	5.02E-1	6.23E-1	1.30E+0	1.22E+2	6.34E+1	2.14E+1	2.10E+0	4.37E+0
o 500 C	1.93E+0	1.93E+0	3.08E+0	6.41E+0	2.50E-1	2.50E-1	1.58E+0	2.60E+0	6.90E-1	1.53E+0	1.53E+0	1.93E+0	3.08E+0	6.41E+0
A	2.21E+0	2.21E+0	3.48E+0	7.22E+0	3.08E-1	3.08E-1	1.81E+0	2.88E+0	8.06E-1	1.76E+0	1.76E+0	2.21E+0	3.48E+0	7.22E+0
Bone (mrem)														
o ICP C	2.26E+1	6.33E-1	2.90E+1	3.92E+1	1.85E+0	2.11E+0	2.65E+0	3.71E+0	2.29E+0	1.24E+2	7.41E+1	3.48E+1	3.10E+1	6.45E+1
A	2.00E+1	8.86E-1	4.53E+0	9.59E+0	6.71E+0	4.28E+0	1.99E+0	2.48E+0	5.18E+0	1.30E+2	7.07E+1	2.60E+1	4.50E+0	9.37E+0
o 500 C	6.25E+0	6.25E+0	9.04E+0	1.88E+1	1.66E+0	1.66E+0	5.59E+0	8.03E+0	3.19E+0	4.52E+0	4.52E+0	6.25E+0	9.04E+0	1.88E+1
A	4.67E+0	4.67E+0	6.60E+0	1.37E+1	1.23E+0	1.23E+0	3.96E+0	5.35E+0	2.30E+0	3.46E+0	3.46E+0	4.67E+0	6.60E+0	1.37E+1
Volumes: (m^3)														
Regular	6.75E+5	6.78E+5	4.89E+5	2.31E+5	3.32E+5	5.18E+5	3.97E+5	3.16E+5	1.52E+5	9.09E+5	9.10E+5	6.78E+5	4.92E+5	2.36E+5
Layered	3.67E+3	-	2.87E+3	5.21E+3	5.70E+5	3.84E+5	2.75E+5	1.65E+5	3.39E+4	7.06E+4	6.96E+4	-	-	-
Not accept.	1.94E+4	1.94E+4	1.13E+3	1.13E+3	9.70E+4	9.70E+4	2.62E+4	1.22E+4	5.19E+4	1.94E+4	1.94E+4	1.94E+4	1.13E+3	1.13E+3
Disposal Costs: ($)														
Design and Op.	1.84E+8	1.88E+8	1.85E+8	1.82E+8	1.99E+8	2.00E+8	1.94E+8	1.89E+8	1.82E+8	1.88E+8	1.94E+8	1.88E+8	1.85E+8	1.81E+8
Long-term Care	4.88E+7	4.88E+7	3.82E+7	3.82E+7	3.82E+7	3.82E+7	3.82E+7	3.83E+7	3.82E+7	3.82E+7	3.82E+7	3.82E+7	3.82E+7	3.82E+7
Total NSD:	2.33E+8	2.37E+8	2.23E+8	2.20E+8	2.37E+8	2.38E+8	2.32E+8	2.27E+8	2.20E+8	2.26E+8	2.32E+8	2.26E+8	2.23E+8	2.19E+8
Mined Cavity ($)	9.93E+6	9.93E+6	5.79E+5	5.79E+5	4.97E+7	4.97E+7	1.34E+7	6.25E+6	2.66E+7	9.93E+6	9.93E+6	9.93E+6	5.79E+5	5.79E+5
Repository ($)	1.01E+8	1.01E+8	5.88E+6	5.88E+6	5.04E+8	5.04E+8	1.36E+8	6.34E+7	2.70E+8	1.01E+8	1.01E+8	1.01E+8	5.88E+6	5.88E+6

which are segregated and stable, the intruder-agriculture scenario is assumed not to occur and the intruder-construction scenario is considerably reduced in its impact. (This is also termed the intruder-discovery scenario.) The full extensive intruder scenarios are conservatively applied for all waste streams at 500 years whether or not the waste stream is segregated or the waste is in a stable form. Impacts at the end of the institutional control period and at 500 years are again volume-averaged over all (stable and unstable) waste streams accepted for disposal.

4.5.3 Results of Analysis

The results of the 24 case studies are shown in Table 4.20. Also shown in this table is an additional case which illustrates costs and impacts of no action (case a), as well as two cases (cases b and c) for which the L-DECONRS and N-SOURCES waste streams are removed but no other action is taken to protect a potential inadvertent intruder (no layering is performed for any waste streams).

Across the top of the table are listed the descriptions of the cases. The variables considered include the dose limitation criteria, the waste spectrum, the institutional control period, and whether or not segregation is implemented at the disposal facility. Next, radiological impacts in mrem to whole body and bone are listed for the intruder-construction and intruder-agriculture scenario for two time periods after license termination: at the end of the assumed institutional control period and at 500 years. Next, the volumes (in m^3) are shown for waste disposed as regular waste, disposed as layered waste, and not acceptable for disposal.

Costs are listed toward the bottom of the table. Shown are design and operation costs, postoperational costs (closure and long-term care costs), and total (design and operation plus postoperational care) near-surface disposal costs. Design and operation costs are calculated as a total sum over 20 years of facility operation and are a function of facility design (whether or not segregation is implemented), the dose limitation criteria chosen, and the waste spectra. The less the volume of waste delivered to the disposal facility, the lower the total design and operation costs. For this analysis, postoperational costs were calculated by assuming a high level of long-term care effort for all cases. Differences in the long-term care costs for the cases are calculated solely as a function of the assumed length of the active institutional control period.

Costs for disposal of waste streams found to be not acceptable for near-surface disposal are also illustrated as two examples. In the first example, the waste streams unacceptable for near-surface disposal are assumed to be disposed into a mined cavity which is licensed to a commercial operator. Costs are calculated based upon an estimate of $512 per cubic meter of waste, which is the lower end of the range for mined cavity disposal given in Appendix F. This level of costs is based upon an assumption that an existing mine may be used and does not include any storage costs prior to shipment of the waste to the mine. In addition, the costs do not include cost for closure and long-term care of the mined cavity. In the second example, costs are estimated based upon an assumption that the Department of Energy accepts the waste for disposal into a federal

repository. Costs are calcualted based upon an estimate of $5200/m^3 of waste, which includes costs for retrievable storage, retrieval, processing, transportation, and disposal into a geologic repository.

These costs for the two examples are given in 1980 dollars and should be considered only illustrative approximations. There are currently no mined cavities licensed by either NRC or an Agreement State, and wastes would have to be stored until such time (if and when) such a facility is licensed. No analysis is performed in this EIS to determine if waste unacceptable for near-surface disposal would be acceptable in a commercially operated mined cavity. Many such wastes (particularly transuranic waste streams) unacceptable for near-surface disposal would probably end up as candidates for a federal repository. Additional costs would be involved for storage until either a disposal facility is available to accept the waste for disposal or DOE is in a position to accept the waste for retrievable storage.

Comparing Cases 1 through 8, several trends are observed:

1. The longer the assumed institutional control period, the greater the volume of waste that can be disposed by less expensive methods. For example, the ratio of the volume of waste that can be disposed by regular means vs. the volume of waste that must be disposed through layering is as follows: Case 2: 7.51; Case 4: 9.03; Case 6: 12.91; Case 8: 367.29. As long as only a relatively small volume of waste requires layering (e.g., as in Cases 4 through 8), then layering can be accomplished with little expense, with little or no disruption of existing practices, and with no decrease in disposal efficiency (no increase in land use). However, if large volumes of waste require layering (e.g., as in Case 1), then this could cause increased expense, some disruption of existing practices, and a decrease in disposal efficiency.

2. The longer the assumed institutional control period, the lower the potential exposures at the time that intrusion is assumed to occur (which is immediately after the end of the institutional control period). On the other hand, the longer the institutional control period, the greater the long-term care costs.

3. The practice of waste segregation generally slightly increases the quantity of wastes which may be disposed by less expensive means. For example, compare the volumes of waste in the "regular" class and the "layered" class for Cases 1 vs. 2; 3 vs. 4; and 5 vs. 6. This effect is of most significance for Cases 1 and 2.

4. The practice of waste segregation generally reduces potential intruder exposures.

5. The volume-weighted impacts calculated at the institutional control period are invariably significantly less than the assumed dose

limitation criteria. Of course, the longer the institutional control period, the lower the calculated impacts. Since varying the institutional control period does not vary the volume of waste calculated to be unacceptable for near-surface disposal (the N-SOURCES and L-DECONRS stream are calculated to be unacceptable in all 8 cases), the intruder impacts at 500 years do not vary from one case to the next. These impacts are in the range of about 1.5 to 4.5 mrem.

From the analysis in Cases 1 through 8, there does not appear to be any compelling analytical reason to choose one institutional control period over another. It appears that the assumption of whether or not waste segregation is carried out affects the volumes of waste disposed by either regular or layered means as much as the institutional control period chosen. In any case, provided waste segregation is implemented, there is no difference in total waste volumes disposed between an institutional control period of 50 years and 300 years.

Of the institutional control periods considered, 50 years would likely cause the most change to present practices, the most added design and operation expense, and the most likelihood of a potential decrease in disposal efficiency. In addition, it is very unlikely that the extensive intruder impacts considered in this EIS could occur at a time period only 50 years following license termination. Finally, implementation of a 50-year institutional control period may serve to inhibit volume reduction of wastes. In general, volume reduction is desirable as it can lower disposal costs to a waste generator, improve disposal efficiency (less land use), and increase the stability of the waste (lowering potential ground-water impacts and potential long-term care costs).

This leaves a choice in the range of 100 to 300 years. Since general support for 100 years was received at the regional workshops and the calculated difference in design and operations cost to a waste generator between 100 years and 300 years is low, the more conservative time period was selected.

Cases 9 through 14 illustrate the effects of other waste spectra, assuming a continuation of the previously assumed dose limitation criteria of 500 mrem to the whole body. Waste spectra 2 through 4 consider different degrees of volume reduction, and so the volumes classified are different from Cases 1 through 8. Of interest is a comparison of calculated intruder exposures for Cases 10, 13, and 14 with each other and with Case 4. In these four cases, the dose limit and the institutional control period are the same but different waste spectra are considered. The calculated exposures are similar at the end of the assumed institutional control period (100 years) for Cases 4, 10, and 13. Even for the extreme case of volume reduction assumed for waste spectrum 4 (Case 14), the calculated impacts are only a few mrem higher. After 500 years, intruder exposures are only slightly higher for all cases (except Case 14) than the exposures calculated for Cases 1-8. For Case 14, exposures are still less than 20 mrem for the intruder-construction scenario and less than 15 mrem for the intruder-agriculture scenario.

In addition, compared to Cases 1 through 8, no additional volumes of waste are classed as unacceptable for near-surface disposal. The same two streams as

before--the N-SOURCES and L-DECONRS streams--are involved. As a minor perturbation, for Cases 13 and 14, the L-DECONRS stream is assumed to be calcined, resulting in significant volume reduction (to 1.13 E+3 m^3). The N-SOURCES waste stream (51.5 m^3), for which no volume reduction is assumed for any of the 4 spectra, follows the familiar pattern of Cases 1 through 8.

What this analysis appears to indicate is that except for a few waste streams which are problematical in any case, use of an institutional control period of 100 years and dose limitation criteria of 500 mrem/yr (whole body) would not be expected to inhibit use of volume reduction as a waste processing technique.

Another interesting effect is observed by comparing Cases 7 and 8 with Cases 11 and 12. If waste segregation is not implemented, then the intruder impacts for waste spectrum 1 at 300 years is less than those for waste spectrum 2. However, if waste segregation is implemented, the opposite effect is seen.

The effects of using different dose limitation criteria are set out in Cases 15 through 24. In Cases 15 through 19, the dose limitation criteria is assumed to be in the range of 25 millirem whole body (75 millirem thyroid). In Cases 20 through 24, the dose limitation criteria is assumed to be 10 times that for Cases 1 through 14, or 5,000 mrem (5 rem) whole body. For all cases, the institutional control period is assumed to be 100 years.

As can be seen in Cases 15 through 19, use of an intruder dose limitation criteria in the range of 25 mrem (whole body) would tend to result in larger costs to waste generators. Due to reduced volumes of waste accepted for near-surface disposal, similar or somewhat reduced design and operation costs are calculated (e.g., compare Cases 15 and 16 with Cases 3 and 4; Case 17 with Case 10; or Case 18 with Case 13). However, mined cavity and repository costs are higher. For most of the waste spectra, approximately the same volume of waste must be layered as that which can be disposed unlayered. In addition, larger volumes of wastes would not be acceptable for near-surface disposal. For example, in Case 16, nearly 100,000 m^3 of waste would be classified as not acceptable. Compared to an intruder dose limitation criteria in the range of 500 mrem (whole body), use of the lower dose limitation criteria would result in higher costs, more changes to existing practices, and less efficient land use. There is no disposal facility yet constructed, such as a geologic repository, offering greater isolation than a near-surface disposal facility. This means that such wastes would have to be stored prior to disposal--perhaps for extended time periods.

In addition, although use of the 25 mrem dose limitation criteria results in reduced potential exposures at 100 years (by a factor of 10 for most cases), only a negligible difference in intruder exposures is seen at 500 years. This means that use of the 25 mrem (whole body) dose criteria will provide little additional reduction in long-term potential intruder exposures.

The effect of implementing the highest alternative dose limitation criteria (5 rem whole body) in Cases 20 through 24 is seen to be somewhat similar to the effects of a dose limitation criteria in the range of 500 mrem/yr. Similar to Cases 1 through 14, the L-DECONRS and N-SOURCES waste forms are always classed as being unacceptable.

Another interesting aspect is the volume-weighted intruder impacts. As before, the impacts calculated are invariably considerably less than the dose limitation criteria. In addition, the impacts calculated for the higher (5 rem) criteria are similar to those previously calculated for the 500 mrem criteria. This implies that one could possibly use two dose limitation criteria--a lower one (e.g., 500 mrem) for longer-lived higher hazard isotopes such as transuranics and a higher one (e.g., 5 rem) for shorter half-lived fission products such as Cs-137. Use of a higher dose limitation criteria for shorter-lived isotopes could cause an initial higher hazard. Use of such a criteria would have little effect on the long-term hazard, however. For example, if it is assumed that a raise in the Cs-137 limit by tenfold from 500 mrem to 5 rem causes a tenfold increase in potential intruder hazard (unlikely as the above analysis indicates) and the higher activity waste is stabilized and segregated (e.g., waste spectra 2, Cases 10 and 22), then the potential exposures would still be less than 500 mrem/yr. These higher potential exposures would only last for a short time period, and would fall by a factor of 10 in a space of only 100 years.

As shown, the impacts at 500 years are similar to those calculated for Cases 1-8.

It may also be useful to examine use of a "hot waste facility" for possible disposal of waste streams found in the 24 cases to be unacceptable for disposal.

For the purposes of this analysis, the hot waste facility is assumed to be a cement-walled trench into which wastes are stacked and then grouted in place. A one-meter thick concrete cap is then poured over the waste and a few meters of earth are then emplaced over the facility. Thus, the waste is enclosed in a large monolithic block of concrete. The facility is assumed to be effective for 1000 years, after which the potential intrusion impacts are calculated and compared against the assumed dose limitation criteria. The intruder-construction and intruder-agriculture scenarios are assumed to occur, but are assumed to be reduced by a factor of 10 due to the presence of the concrete fill. If the calculated exposures still exceed the assumed dose limitation criteria, the waste is assumed to be unacceptable for near-surface disposal.

It is recognized that there are uncertainties regarding use of the "hot waste facility," and its effectiveness. However, it is included to enable an estimate of the effectiveness of extensive near-surface disposal techniques to reduce potential intruder exposures. Use of a hot waste facility is estimated to be much more expensive than either regular or layered disposal. If a hot waste facility were not used at the disposal facility, then the waste streams assumed to be suitable for disposal into a hot waste facility would be considered unacceptable for near-surface disposal.

Potential use of the hot waste facility for disposal of probable material waste was tested for all 24 cases and in no case were the N-SOURCES and L-DECONRS streams found to be acceptable for hot waste facility disposal. This would be expected considering that these two streams are assumed to contain relatively large quantities of transuranic isotopes and no credit is being taken in the analysis for the long-term ability of improved waste forms to reduce dispersion

of the waste into respirable particles. However, in 4 cases, other waste streams previously found unacceptable for near-surface disposal were found to be suitable for hot waste facility disposal. These were Cases 15, 16, 18, and 19 and the costs and impacts of these 4 cases are presented in Table 4.21. All 4 cases involve use of the 25 mrem (whole body) dose limitation criteria.

As shown in Table 4.21, about half of the waste which was previously determined to be unacceptable for near-surface disposal in the 4 cases is found to be acceptable for hot waste facility disposal. However, design and operation costs are raised above the previous cases, and the total costs for mined cavity or repository disposal are still higher than equivalent cases using the other two alternative dose limitation criteria.

4.5.4 Selection of Preferred Alternative

Based upon the preceding analyses, a performance objective for potential inadvertent intrusion may be established. Establishing the performance objective requires establishing a dose limitation criteria for intrusion as well as a time limitation for active institutional controls.

The preferred dose limitation criteria objective selected by NRC is the same as the maximum unrestricted area exposures as set out in 10 CFR Part 20, or 500 mrem/yr to the whole body. A dose limit in the range of 25 mrem/year was judged to result in considerably more costs, more change in existing practices, and greater reduction in disposal efficiency than the other two alternatives. This is especially important considering the hypothetical nature of the intrusion event. The 5 rem alternative was seen to involve approximately the same costs and impacts as the 500 mrem alternative. The higher dose limit, however, could potentially allow disposal of larger quantities of long-lived isotopes, which could result in moderately higher intruder hazards which could extend for long time periods. Therefore, 500 mrem/yr was selected as a general dose limitation guideline. This limitation agrees with the concerns of the four regional workshops. In this regard, it was also observed in the above analysis that a higher limitation could actually be safely used for shorter-lived isotopes such as Cs-137. Use of such a limit would have no effect on the longer-term hazard to an intruder.

The second part of the inadvertent intrusion performance objective is how long should credit be given to active institutional controls to prevent such intrusion. A time period that is too short could result in very high disposal costs for much of the LLW. A period that is very long, on the other hand, may place an undue burden on future generations. NRC analyzed alternative institutional control periods of 50, 100, 150, and 300 years to see if there was any technical preference for selecting one time period over another. From the analysis, there did not appear to be any overly compelling numerical reason to adopt a particular institutional control period. NRC believes, however, that institutional controls will last at least 50 years. 300 years appeared to be too long of a time period and did not offer any compelling numerical advantage over 150 years. The preferred alternative was, therefore, in the range of 100 to 150 years. NRC selected 100 years as the preferred institutional control period. This period of time agrees with previous estimates on the effective

Table 4.21 Comparison of Cases Incorporating a Hot Waste Facility

Case Description and Impact Measures	Case 15	16	18	19
Case Description:				
Dose limitation criteria (mrem)	25	25	25	25
Waste spectrum	1	1	3	4
Institutional control period (yrs)	100	100	100	100
Segregation (yes/no)	No	Yes	Yes	Yes
Intruder Impacts:				
Body (mrem)				
o 100 C	1.23E+0	1.75E+0	3.53E+0	2.11E+0
A	2.38E+0	1.59E+0	6.18E-1	1.28E+0
o 500 C	2.50E-1	2.50E-1	2.60E+0	6.90E-1
A	3.08E-1	3.08E-1	2.88E+0	8.06E-1
Bone (mrem)				
o 100 C	1.80E+0	2.03E+0	3.68E+0	2.31E+0
A	5.84E+0	3.90E+0	2.46E+0	5.08E+0
o 500 C	1.66E+0	1.66E+0	8.03E+0	3.19E+0
A	1.23E+0	1.23E+0	5.35E+0	2.30E+0
Volumes: (m^3)				
Regular	3.32E+5	5.18E+5	3.16E+5	1.52E+5
Layered	5.70E+5	3.84E+5	1.65E+5	3.39E+4
HWF	4.97E+4	4.97E+4	2.93E+3	2.93E+3
Not acceptable	4.73E+4	4.73E+4	9.26E+3	4.89E+4
Disposal Costs: ($)				
Design and op.	2.15E+8	2.16E+8	1.92E+8	1.85E+8
Postoperational	3.82E+7	3.82E+7	3.82E+7	3.82E+7
Total NSD:				
Mined Cavity: ($)	2.42E+7	2.42E+7	4.74E+6	2.50E+7
Repository: ($)	2.46E+8	2.46E+8	4.82E+7	2.54E+8

length of active institutional controls made by EPA and also is consistent with the consensus of the regional workshops. NRC identified no overriding social or political rationale for selection of one time period over another. Based on the comments received on the preliminary draft of Part 61 and the workshops held, the general consensus was that 100 years was about the right time period upon which reliance should be placed on active institutional controls.

4.6 DEVELOPMENT OF TECHNICAL CRITERIA

Based on the preceding analysis, NRC selected minimum requirements that should be considered and applied in all cases to help ensure that the performance objective will be met. The results indicate that with modest increases in cost (relating to improving the form and properties of waste shipped for disposal, improvements in the design and methods of disposal for certain high activity wastes, and application of institutional controls for a reasonable period of time), the potential impacts to an inadvertent intruder can be greatly reduced.

The following subsections present the technical requirements selected, based on the preceding analysis, to assure protection of the inadvertent intruder. The requirements deal with each of the four basic components of any disposal facility: institutional controls, site characteristics, design and operations, and waste form and packaging. The requirements are set out in general terms with the intention of setting out the overall intent of the requirements rather than providing the precise regulatory wording. Some of the requirements are new and are derived from the above analysis. Others only involve a codification of existing practices currently being applied at the existing disposal facilities.

4.6.1 Institutional Control Requirements

1. Requirement

Disposal of radioactive waste received from other persons shall be permitted only on land owned by the federal government or by the state government in which the site is located.

Analysis

Present requirements in Section 20.302(b) of 10 CFR Part 20 require federal or state government ownership of land used for commercial disposal of radioactive waste. At 5 of the 6 existing commercial disposal sites, the land used for waste disposal was purchased by the disposal facility operator who then deeded the land to state ownership. The state then leased the land back to the disposal facility operator. At the commercial disposal facility located in the Hanford Reservation, however, the disposal site land is owned by the federal government. In this case, the land was leased by the federal government to the state of Washington, who then subleased the land to the disposal facility operator. NRC believes that the existing requirement for government land ownership should be continued since there is a higher degree of assurance that the state or federal

government will continue to exist for longer periods of time than a private organization. The need for control of near-surface disposal facilities will last for one hundred years. Adapting this provision in 10 CFR 61 for state or federal ownership of land used for disposal of waste received from other persons would involve no change from existing regulations and no increase in cost over what is already being done today. The costs for government land ownership have been included in the base case analyses of costs and impacts.

2. Requirement

The land owner shall carry out an active institutional control program to physically control access to the site following transfer of control from the site operator. Active institutional controls shall not be relied upon for more than 100 years.

Analysis

Active institutional control is an extension of the existing requirement for government land ownership and involves the physical controls and surveillance of a site carried out by the state or federal government land owner to preclude inadvertent intrusion and carry out other control and surveillance activities. As a part of these control and surveillance activities, the site owner would carry out an environmental monitoring program to check on the continued performance of the site, administer funds to cover the costs of these "active institutional control" activities, carry out minor maintenance activities that may be required (e.g., upkeep of a security fence), and carry out other necessary responsibilities. An active institutional control program is a codification of existing practice at the existing sites including the need to collect and administer funds to cover the costs of this control program.

Given such an active control program, a basic question remained, however, regarding how long reliance can or should be placed on such active institutional controls. NRC recognizes that such active controls could very well last for several hundreds of years based on the actions of those responsible for such a program in the future. For purposes of Part 61, however, NRC will assume such controls can only be relied upon for 100 years. The costs for 100 years of active institutional control have been included in the base case analysis of costs and impacts.

3. Requirement

Disposal cells shall be surveyed, mapped, and the location and hazard of the disposal facility recorded with a number of local, state, and federal agencies.

Analysis

By definition, an inadvertent intruder is one who unknowingly contacts the radioactive waste without knowing that it is there. Therefore, it is important to consider passive methods by which the presence of hazardous materials may be communicated to future generations, thus minimizing or potentially even eliminating the possibility of inadvertent intrusion. First, transferring

records of the disposal facility location to a diversity of locations throughout all levels of government will help to ensure that an awareness of the potentially hazardous condition at the site will be known to future generations. Diverse locations could include local libraries, local zoning boards, state land development offices, local and statewide executive offices, and federal archives. The cost for this is low. Depending on site-specific conditions, the government could put the land to controlled productive use during the active institutional control program where the disposed waste would not be disturbed. The potential hazard of the disposal facility could also be recorded upon the deed or title to the land.

It is also important to maintain an accurate record of the locations at a disposal facility which are actually used for waste disposal. The locations of disposal cells can be readily surveyed, mapped, and referenced to a benchmark such as a USGS benchmark. This practice has a number of advantages:

- Surveys help to perpetuate a record of the disposal facility.
- Surveys help to provide quality assurance checks that disposal cells used for waste disposal are constructed according to approved specifications.
- Care in recording the locations of disposed waste serve to help identify disposal cells in case remedial action is required in the future.

All of the disposal facilities presently operating now require that locations of disposal trenches be surveyed and referenced to a benchmark. The cost for such surveys has been included in the costs for the reference facility.

4.6.2 Site Characteristics

The following site suitability requirements reflect existing practice to consider future population growth, land use development, and potential natural resources at the site. Since they reflect existing practice the cost and impacts are considered through the base case analysis, and no cost benefit analysis has been performed.

Requirement

1. Within the region or state where the facility is to be located, a disposal site should be selected so that projected population growth and future developments are not likely to affect the ability of the disposal site to meet the intruder performance objective.
2. Areas must be avoided having economically significant natural resources, which, if exploited, would result in failure to meet the intruder performance objective.

Analysis

In siting of near-surface disposal facilities, areas of high population density should be avoided to help reduce the potential of inadvertent intrusion after

the end of institutional controls. Areas that are remote and less densely populated would generally be less likely to be immediately utilized, reducing the potential for inadvertent intrusion. In addition, the site should not have any extensive natural resources on the ground surface, in the hydrogeologic units used for disposal or at greater depth such as to encourage drilling or excavation within the site after institutional controls end. Sites having resources at much greater depths below the disposed waste would be acceptable provided the exploitation of such resources would not affect the performance of the facility (e.g., lead to increased ground-water contact with disposal waste or result in decreased ground water travel times).

4.6.3 Design and Operations

Requirement

1. Higher concentration waste presenting higher hazard potential to an inadvertent intruder must be disposed of at a minimum depth (to the top of the waste) of 5 meters below final grade (or the surface of the cover) or must be disposed of with natural or engineered barriers that are designed to protect against inadvertent intrusion for at least 500 years.

2. Compressible wastes shall be segregated from and disposed of separately from waste in a stable noncompressible form.

Analysis

Many alternatives may be applied to reduce the impacts of inadvertent intrusion. Many have either been applied in the past at existing disposal facilities or will require only minor modification to existing designs and operational practices. Those that NRC examined in the earlier analysis were:

- Use of thicker disposal cell covers
- Use of special waste disposal cells such as caissons, walled trenches, or other "engineered structures"
- Layered disposal
- Slit trench disposal
- Grouting
- Engineered intruder barrier

The results of the earlier analysis indicate that depth of burial (i.e., layering the waste) is the easiest to implement technically and costs the least. In this case, the more active waste would be preferentially placed toward the bottom of the trench. The potential intruder would tend to contact the lower-activity waste. Since many of high-activity waste streams which could be disposed in this manner would also be expected to contain high-surface gamma radiation levels, this technique would also help to reduce potential occupational exposures to disposal facility workers. The hot waste facility analyzed--a type of engineered structure--is probably the most difficult to implement technically and costs the most. Others fall in between except for significantly different methods of disposal (e.g., mined cavity disposal). To

maintain flexibility in assuring protection of the inadvertent intruder by placing greater controls on the higher activity wastes, NRC selected no specific prescriptive requirement. Such flexibility will allow for regional differences in site characteristics, different facility designs, and individual preferences of disposal facility operators.

In determining which waste streams may not be acceptable for near-surface disposal, one of the questions is how long barriers to a potential intruder may be expected to last. Such barriers, of course, would be expected to last several hundred years but not forever. Some barriers may last longer than others. For example, the effectiveness of the "hot waste facility" discussed above to deter the actions of a potential intruder would be expected to last longer than a disposal method such as layering. From the analyses performed earlier in the EIS, it can be seen that due to radioactive decay, exposures to a potential intruder from almost all waste streams typically considered to be LLW have fallen to a few millirems after a few hundred years--e.g., 500 years. After 500 years, only a few waste streams are estimated to result in potential intruder exposures of a few hundred millirems. Very few (e.g., one or two streams) having small volumes are estimated to result in potential intruder exposures exceeding 500 mrem after 500 years.

The segregation of compressible wastes is discussed in the concluding section on waste form.

4.6.4 Waste Form and Packaging

Requirement

Higher activity waste shall have structural stability. Structural stability can be provided by the waste form itself, processing the waste to a stable form, or placing the waste in a disposal container or structure that provides stability after disposal. Void spaces within the waste and between the waste and its package shall be reduced to the extent practicable. The waste must maintain its physical dimensions and consistency under conditions of the compressive load, radiation, and biodegradation to be encountered in disposal.

Analysis

In general, placing the higher activity waste into a stable form and disposing of them together in a separate disposal unit segregated from compressible wastes reduces the impacts to a potential inadvertent intruder. The waste is less available for inhalation and uptake, and someone intruding into the site would be more likely to identify that they were not digging in soil if they found the remains of solid waste, and would take action to find out what it was before proceeding too far. Other details regarding analysis of this requirement, alternatives considered, and the preferred alternative selected by NRC are set out in Chapter 5.

REFERENCES

1. King, W.L., and J. J. Cohen, Interim Report to the Nuclear Regulatory Commission on Radioactive Waste Classification, UCID-17497, Lawrence Livermore Laboratory, April 18, 1977.

2. Adam, J. A., and V. L. Rogers, A Classification System for Radioactive Waste Disposal--What Waste Goes Where? NUREG-0456, FBDU-224-10, Ford, Bacon and Davis, Utah for NRC, June 1978.

3. Rogers, V. L., A Radioactive Waste Disposal Classification System, NUREG/CR-1005, Ford, Bacon and Davis, Utah for NRC, September 1979.

4. Leddicotte, et al., "Suggested Quantity and Concentration Limits to be Applied to Key Isotopes in Shallow Land Burial, "Management of Low-Level Radioactive Waste, Volume 2, Pergamon Press, 1979.

5. Healy, J. W., and J. C. Rodgers, Limits for The Department of Energy Transuranic Wastes, Los Alamos Scientific Laboratory, LA-UR-79-100, January 1979.

6. U.S. Nuclear Regulatory Commission, Final Environmental Statement Related to Primary Cooling System Chemical Decontamination at Dresden Nuclear Power Station, Unit No. 1, Docket No. 50-10, NUREG-0686, Office of Nuclear Reactor Regulation, October 1980.

7. Rogers, V., et al., Draft Report: Insights into Waste Disposal Options, FBDU-266-004, Ford, Bacon and Davis, Utah for Electric Power Research Institute, October 1979.

8. MacBeth, P., et al., Evaluation of Alternative Methods For the Disposal of Low-Level Radioactive Wastes, NUREG/CR-0680, July 1979.

9. U.S. Environmental Protection Agency, Proposed Criteria for Radioactive Wastes, Recommendations for Federal Radiation Guidance, Federal Register, 43 FR 53262, November 1978.

10. U.S. Nuclear Regulatory Commission, Advance Notice of Proposed Rulemaking on 10 CFR 60: Disposal of High-Level Radioactive Wastes in Geologic Repositories, Federal Register, 45 FR 31393, May 13, 1980.

11. U.S. Nuclear Regulatory Commission, Notice of Proposed Rulemaking on 10 CFR 60: Disposal of High-Level Radioactive Wastes in Geologic Repositories, Federal Register, 46 FR 35280, July 8, 1981.

Chapter 5

LONG-TERM ENVIRONMENTAL PROTECTION--PRESENTATION AND ANALYSIS OF ALTERNATIVES

5.1 INTRODUCTION

This chapter reviews a number of potential pathways for long-term release of radionuclides to the environment from disposed waste. These pathways include:

- Ground-water migration;
- Gaseous releases from decomposing waste;
- Plant and animal intrusion; and
- Wind and surface water erosion and transport.

Of these, NRC staff believes that the most significant pathway is ground-water migration. Gaseous releases do not have a large impact and can be reduced by assuring stable site conditions. Impacts from plant and animal intrusion are site-specific and can be reduced through engineering designs applied to reduce ground-water migration and potential intruder exposures. Erosion is a slow, long-term process which can be controlled through proper siting and good operational techniques.

Section 2 below analyzes ground-water migration presenting the impacts of the base case "no action" alternative and the incremental changes in those impacts due to application of a range of alternatives. In the analysis of alternatives, a number of cases are considered which represent a range of near-surface disposal technology options and waste forms. The results of these case study analyses illustrate a range of potential radiological impacts, disposal costs, and long-term maintenance requirements representative of application of current disposal technology. In these cases, the results from the preceding intruder analysis are incorporated into the case study analyses. This is done to account for any design and operational changes that may be required due to consideration of intruder protection.

Section 3 analyzes development of a performance objective for long-term releases to ground water leading to selection of a preferred performance objective. Section 4 reviews the other three potential environmental release pathways, presenting typical impacts based on existing published data in addition to ways to mitigate those impacts. Section 5 reviews technical requirements derived from the analyses, plus those involving codification of existing practice, that should be applied in the near-surface disposal of waste.

5.2 GROUND-WATER MIGRATION

To analyze potential ground-water migration impacts from near-surface radioactive waste disposal, NRC staff has adopted use of a model reference waste disposal facility located in a humid environment. To provide a reasonable yet conservative analysis, movement of radionuclides from the disposed waste and through ground water has been modeled based upon calculational procedures

derived from Darcy's Law. (Additional information is contained in References 1 and 2.) As depicted in Figure 5.1, a disposal cell (or group of disposal cells) is assumed to be located within an unsaturated zone of thickness (Zo). Both the unsaturated zone and the underlying saturated zone (aquifer) are assumed to be stationary, homogeneous, and isotropic, and the fluid moving through these zones is assumed to be incompressible and of constant viscosity. The disposal cell is filled with a heterogeneous mixture of waste streams ranging from streams having very low activity to streams having relatively high activity. Each waste stream contains a particular suite of radioisotopes and, if contacted by water, leaches at a particular rate. Precipitating water striking a covered disposal cell may percolate into and flow through the cell and leach out a portion of the radionuclides contained in the waste.

The source term of each radioisotope in the disposed waste leaving the bottom of the disposal cell is given by (Jo) in Curies/year. The radioactive source moves down through the unsaturated zone with hydraulic velocity (w), and mixes with the water in the saturated zone. The water in the saturated zone, carrying the radiocontaminants with it, is then assumed to flow horizontally with hydraulic velocity (v). As illustrated in Figure 5.1, the contaminated ground water can be visualized as crossing a discharge surface at some arbitrary distance (x) downstream of the disposal cell(s), having a radionuclide activity equal to J (in Ci/yr).

The source term (Jo), and the factors that go into its determination, are discussed more extensively in Appendix G and Reference 1. It is a somewhat complicated function of site environmental conditions, disposal facility design and operating practices, waste characteristics (including waste leaching characteristics, radionuclide concentrations, chemical content, and structural stability), and the potential for intrusion by humans, plants, or animals. To provide a reasonable yet conservative analyses, the reference facility is assumed to experience a relatively high precipitation rate (1.17 m/yr) and a high natural percolation rate (PERC = 180 mm/yr). The percolation of water into disposal cells at the reference facility is a variable depending upon facility design and operating practices and waste form. For example, unstable waste forms would result in higher percolation of rainwater into disposal cells (due to subsidence of disposal cell covers), while improved thicker disposal cell covers and compaction techniques would reduce percolation. If the unstable waste streams were disposed mixed with the stable waste streams, then all of the wastes would experience higher percolation rates. However, if the unstable waste streams were disposed segregated from the unstable waste streams, then only the unstable waste streams would experience the higher percolation.

Percolation rates into disposal cells may also be increased through intrusion by inadvertent humans, deep-rooted plants, and burrowing animals. During the active institutional control period following license termination, the site owner would be expected to survey and maintain the disposal facility, to prevent inadvertent intrusion by humans, and to control and limit potential intrusion by deep-rooted plants and burrowing animals. However, following the active institutional control period, breakdowns in such surveillance and control

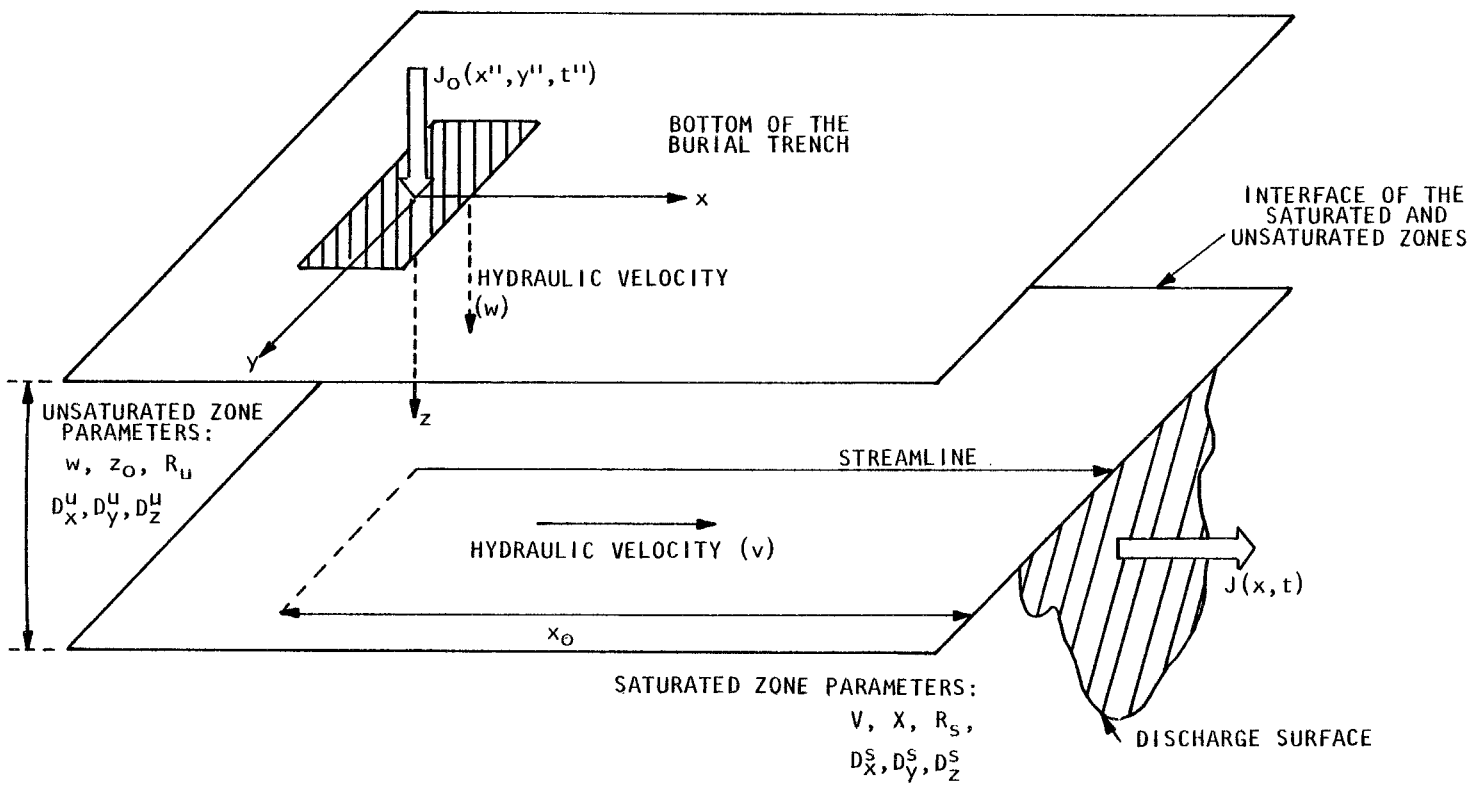

Figure 5.1 Geometry of Ground-Water Scenario

activities are postulated to occur. Therefore, for disposal facility designs which depend upon improved covers to reduce percolation (e.g., a walled trench, a compacted clay cap), a reduction in the effectiveness of these disposal covers is assumed at a time 100 years following license termination. The extent of this reduction in effectiveness is discussed in Appendix G. Briefly, however, 90% of the disposal area experiences percolation equal to twice the previously assumed value for that case. The remaining 10% experiences an even higher percolation, the specific value of which depends upon the case considered.

As another example, the leaching of radionuclides from the disposed waste depends upon the radionuclide content, whether the wastes are solidified, and the chemical content of the waste. Unsolidified waste streams are assumed to leach at a fraction corresponding to leach fractions measured under totally saturated conditions at the Maxey Flats, Kentucky and West Valley, New York disposal facilities. Solidified waste forms are assumed to leach at lower rates based upon an approximation derived from experimental data (Refs. 1, 3). However, increased leaching of solidified waste forms is assumed if chelating agents are present. If wastes containing chelating agents or organic chemicals are disposed in a segregated manner from other waste streams, then the higher leaching fractions are only applied to the segregated streams; otherwise, the higher leaching fraction is applied to all solidified streams.

After the radionuclides have left the disposal cell, the movement of radionuclides through ground water may be estimated by a number of calculation techniques-- many of which may be extremely complicated and require a great deal of site-specific information. Given the generic nature of this analysis, however, a simpler approximation in this EIS is used which allows rapid consideration and comparison of a number of alternatives. This approximation solves the Darcy's Law differential equations in terms of error functions as summarized in Appendix G. (Further information is contained in References 1 and 2.) Basically, however, the disposed waste is modeled as 10 distributed sources or sectors (which is more realistic than the assumption of a point source), as shown in Figure 5.2. Movement of radionuclides out of the sectors and to a biota access location is calculated principally as a function of the ground-water travel time from the sector to the access location, the Peclet number (basically the distance to the access location divided by the longitudinal dispersivity of the medium), and the retardation coefficients of the medium. The retardation coefficients assumed for the reference disposal facility are intended to correspond to soils having moderate permeability (See Table 5.2 in Section 5.2.1) and are radionuclide-specific. In this environmental impact statement, lower retardation coefficients are assumed for radionuclides contained in waste streams assumed to contain or be contacted by chelating agents or organic chemicals.

Radionuclide concentrations may be then determined as a function of time at four principal downstream biota access locations:

1. a well located on the disposal facility and potentially used by an inadvertent intruder following the end of the 100-year active institutional control period;

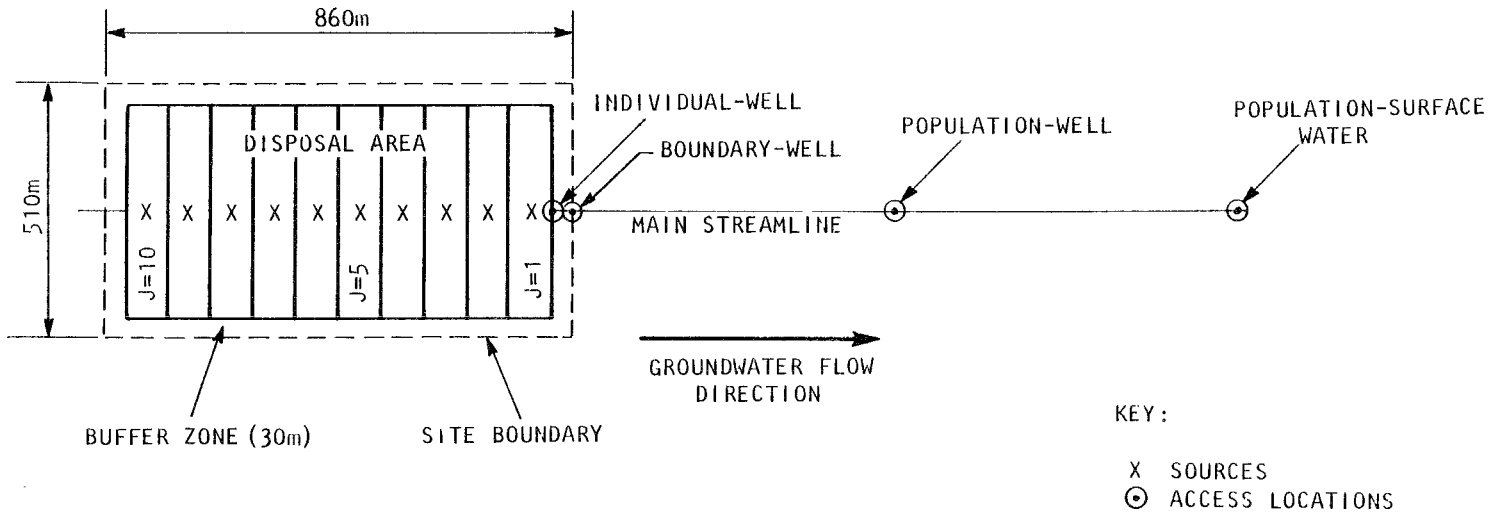

Figure 5.2 Geometric Relationships of Disposal Area and Ground-Water Access Locations

2. a well located at the site boundary which is assumed to be used by a few individuals;

3. a well assumed to be located approximately 500 meters down gradient from the disposal facility and used by a small population of about 100 persons; and

4. a small stream located about one kilometer down gradient from the disposal facility and assumed to be used by a small population of about 300 persons.

Once the concentrations at the biota access locations are determined, potential exposures from consumption and use of the water may be determined for seven bodily organs. These include whole body, bone, liver, thyroid, kidney, lung, and the gastro-intestinal (GI) tract.

As discussed earlier, the calculational procedure first estimates the source term Jo, in curies/year, leaving the disposal cell. However, the concentrations of radionuclides at the biota access locations are also determined by the volume of water with which the released and migrating radionuclides are diluted. All other considerations being equal, the larger the volume of water with which the radionuclides are diluted, the lower the concentration of the radionuclides in the water. The dilution volume is a site-specific variable, and is dependent upon the attributes of the aquifer (thickness, flow rate, dispersivity, etc.), the distance from the release point (the further away from the release point, the greater the mixing that would likely occur), and man-made perturbations such as pumping water from a well.

Given the generic nature of the analysis in this environmental impact statement, reasonable yet conservative assumptions are made regarding the dilution volumes. For the first two biota access locations (intruder well and boundary well), released radionuclides are assumed to be diluted by a volume of water equal to that provided by natural percolation of rainwater upon the disposal area (about 87 acres). (At the reference facility, this volume of water is equal to 63,400 m^3.) Of this volume, the individual using the contaminated water is assumed to withdraw 7700 m^3/year (3.84 gpm), which represents the basic annual needs of a single person living in a rural area (See Appendix G).

For the population well, the dilution volume is assumed to correspond to the annual volume of water withdrawn from a water well pumping at a rate of 100 gpm (200,000 m^3/yr). Small farming communities that utilize ground water for their needs usually have wells that range from 100 gpm to 1,000 gpm depending on the population. For the surface water access location, a stream is assumed having a flow rate of about 5 ft^3/sec (4.5×10^6 m^3/yr). A stream having a flow rate of much below this value is unlikely to be used for human consumption.

5.2.1 Description of Base Case No Action Alternative

Base case radiological impacts are calculated for the three base cases summarized in Table 5.1. Case 1 illustrates the potential ground-water impacts of disposing base case waste forms under conditions which promote disposal facility instability

Table 5.1. Base Cases Considered

Case 1 - Base Case-Moderately Permeable Soils

- Regular shallow land burial (SLB) trench (reference site and base case facility design as set out in Appendix E).
- Waste spectrum 1
- SLB with a thin cap
- No segregation of wastes containing chelates
- No segregation of compressible wastes
- Random disposal of waste
- Layering used as an intruder barrier
- Site soils are assumed to have moderate permeability

Case 2 - Base Case-Highly Permeable Soils

- Regular SLB trench
- Waste spectrum 1
- SLB with a thin cap
- No segregation of wastes containing chelates
- No segregation of compressible wastes
- Random disposal of waste
- Layering used as an intruder barrier
- Site soils are assumed to have relatively high permeability

Case 3 - Base Case-Low Permeable Soils

- Regular SLB trench
- Waste spectrum 1
- SLB with a thin cap
- No segregation of wastes containing chelates
- No segregation of compressible wastes
- Random disposal of waste
- Layering used as an intruder barrier
- Site soils are assumed to have relatively low permeability

at a site having moderately permeable soils. Case 2 illustrates the same impacts at a site having highly permeable soils and Case 3 a site having low permeable soils. The three base cases are analyzed to illustrate the relative difference in impacts that may occur due to differences in site-specific ground-water flow conditions. Relative to Case 1, the site for Case 2 is assumed to experience lower leaching due to shorter contact times between percolating water and the disposed wastes, shorter ground-water travel times between the disposed waste and the aquifer, and lower ion exchange. Relative to Case 1, the site for Case 3 is assumed to experience higher leaching (longer contact times), larger ground-water travel times between the disposed waste and the aquifer, and higher ion exchange.

A comparison of the retardation coefficients, contact times and ground-water travel times between the waste and the aquifer assumed for the three cases is included as Table 5.2.

The radiological impacts calculated for Cases 1-3 are conservative but do provide a baseline of data against which potential costs and radiological impacts of alternatives may be assessed. As referred to in Table 5.1, the facility for Cases 1-3 is sited, designed and operated as previously described in Chapter 3 and as set out in detail in Appendix E. The waste is disposed of in a regular shallow land burial trench with a "standard" thin cap.

The waste disposed of at the site is assumed to be that characterized as Waste Spectrum No. 1. "Waste Spectrum 1" refers to the base case waste form--much of which is assumed to be in an easily compressible, readily degradable waste form with relatively high leaching characteristics. Filter sludges and resins are dewatered and little to no compaction is performed for compressible wastes. The waste form for solidified liquids is assumed to be half urea-formaldehyde and half cement. Some liquids--e.g., those from institutional waste generators--are shipped to the disposal facility using absorbents rather than being solidified. Wastes containing organic chemicals, chelating agents, or compressible materials are assumed to be mixed with the higher activity wastes. The waste is also assumed to be randomly disposed into the reference facility, and due to the readily degradable nature of much of the waste, severe subsidence problems are assumed to occur. The facility is assumed to be characterized by potholes and subsidence depressions, leading to sources of rainwater infiltration. Percolation into the waste cells is assumed to be twice as high as the surrounding undisturbed soils. Finally, results from the preceeding intruder analysis are also included such that the higher activity wastes requiring increased intruder protection are disposed on the bottom of the trench. Some wastes, not acceptable for disposal based on the intruder analysis results, are excluded from the analysis.

5.2.2 Costs and Impacts of Base Case No Action Alternative

The base case costs and impacts are summarized on the following three tables which show the impacts and costs for the three cases analyzed. Table 5.3 summarizes the maximum exposures received over 10,000 years for each of the seven organs considered in the analysis from each of the four biota access locations: (1) a well located onsite which is assumed to be used by a potential inadvertent intruder following the end of the active institutional control period, (2) a well located at the site boundary which is assumed to be used by a few individuals, (3) a well assumed to be located approximately 500 meters down-gradient from the disposal facility and used by a small population of about 100 persons, and (4) a small stream located about one kilometer down gradient of the disposal facility, and assumed to be used by a small population of about 300 persons. Also shown is the approximate time, to 10,000 years, that these exposures occur. All exposures listed are to individuals. Table 5.4 illustrates the Case 1 calculated exposures to whole body and thyroid for each of the access locations for a number of time periods after facility closure. Table 5.5 contains a summary of other costs and impacts associated with waste disposal, including short-term population doses due to waste processing and transportation; short-term occupational doses due to waste processing, transport, and disposal; incremental energy

Table 5.2 Comparison of Assumed Environmental Characteristics for Cases 1, 2, and 3

Property	Case 1	Case 2	Case 3
Retardation set used (NRET)	3	2	4
Retardation coefficients			
H-3	1	1	1
C-14	10	10	10
Fe-55	2640	1290	5400
Ni-59	1750	860	3600
Ni-63	1750	860	3600
Co-60	1750	860	3600
Sr-90	36	18	73
Nb-94	4640	2150	10,000
Tc-99	4	3	5
I-129	4	3	5
Cs-135	350	173	720
Cs-137	350	173	7200
U-235	3520	1720	7200
U-238	3520	1720	7200
Np-237	1200	600	2500
Pu-238	3520	1720	7200
Pu-239/240	3520	1720	7200
Pu-241	3520	1720	7200
Pu-242	3520	1720	7200
Am-241	1200	600	2500
Am-243	1200	600	2500
Cm-243	1200	600	2500
Cm-244	1200	600	2500
Infiltrating percolation factor:*	1.16E-3 3.24E-5	1.16E-4 3.24E-6	1.16E-2 3.24E-4
Ground-water travel time from bottom of waste to aquifer (yrs)	10	<<1	60

*This factor is equal to $p \times t_c$. Substituting for t_c, this factor is equal to p^2/nv, where

p = amount of the precipitation (m/yr) that infiltrates into a disposal cell and comes into contact with the waste.

$t_c = p/nv$ = percolation contact time with the waste.

n = waste cell effective porosity

v = speed of the percolating water

The first value for each case is for percolation through a disposal cell cover equivalent to natural percolation at the reference facility (180 mm/yr). The second value is for reduced percolation due to an improved disposal cell cover for which the integrity of the cover can be reasonably assumed. See Appendix G.

Table 5.3 Base Radiological Impacts for Cases 1-3

	(mrem/yr)						
Cases*	Body	Bone	Liver	Thyroid	Kidney	Lung	GI
(1)							
Intruder	3.044E+1	3.063E+0	3.044E+1	8.462E+2	3.044E+1	3.044E+1	3.044E+1
Well	(100)	(6,000)	(100)	(4,000)	(100)	(100)	(100)
Boundary	1.571E+2	3.061E+0	1.571E+2	8.462E+2	1.571E+2	1.571E+2	1.571E+2
Well	(70)	(6,000)	(70)	(4,000)	(70)	(70)	(70)
Population	4.434E-1	6,197E-1	2.121E-1	2.673E+2	3.887E-1	1.246E-1	2.839E-1
Well	(6,000)	(8,000)	(8,000)	(4,000)	(6,000)	(8,000)	(6,000)
Surface	1.781E-2	2.685E-2	7.190E-3	1.218E+1	1.526E-2	5.375E-3	1.040E-2
Water	(8,000)	(10,000)	(8,000)	(4,000)	(8,000)	(10,000)	(8,000)
(2)							
Intruder	9.505E+1	1.808E+0	9.498E+1	2.678E+2	9.504E+1	9.495E+1	9.501E+1
Well	(100)	(1,000)	(100)	(800)	(100)	(100)	(100)
Boundary	1.445E+2	1.620E+0	1.445E+2	2.678E+2	1.445E+2	1.445E+2	1.445E+2
Well	(70)	(2,000)	(70)	(2,000)	(70)	(70)	(70)
Population	5.538E-2	1.058E-1	3.210E-2	2.675E+1	4.991E-2	2.124E-2	3.943E-2
Well	(6,000)	(6,000)	(6,000)	(6,000)	(6,000)	(6,000)	(6,000)
Surface	2.988E-3	7.152E-3	1.926E-3	1.219E+0	2.731E-3	1.432E-3	2.242E-3
Water	(10,000)	(10,000)	(10,000)	(10,000)	(10,000)	(10,000)	(10,000)
(3)							
Intruder	9.344E+1	7.529E+0	9.344E+1	8.025E+2	9.344E+1	9.344E+1	9.344E+1
Well	(100)	(6,000)	(100)	(900)	(100)	(100)	(100)
Boundary	2.637E+1	7.266E+0	2.637E+1	8.246E+2	2.637E+1	2.637E+1	2.637E+1
Well	(120)	(6,000)	(120)	(2,000)	(120)	(120)	(120)
Population	1.025E+0	5.014E+0	1.010E+0	6.508E+2	1.022E+0	1.003E+0	1.014E+0
Well	(10,000)	(10,000)	(10,000)	(4,000)	(10,000)	(10,000)	(10,000)
Surface	4.314E-2	1.947E-1	4.029E-2	3.522E+1	4.243E-2	3.896E-2	4.108E-2
Water	10,000)	(10,000)	(10,000)	(4,000)	(10,000)	(10,000)	(10,000)

*The radiological impact estimates shown for each access location are the maximum over 10,000 years as calculated using the GRWATER code. The second number, in parentheses, is the year after facility closure that the calculated impacts occur. The impacts are listed as obtained from the code output and should not be interpreted as representing accuracy to three significant digits.

Table 5.4 Summary of Case 1 Calculated Exposures to Whole Body and Thyroid as a Function of Time

	(mrem/yr)							
	Whole Body				Thyroid			
Year Following Closure	Intruder Well	Boundary Well	Population Well	Surface Water	Intruder Well	Boundary Well	Population Well	Surface Water
40	9.775E+1	0	0	0	9.775E+1	0	0	0
50	5.012E+2	0	0	0	5.012E+2	0	0	0
60	2.854E+2	5.003E-1	0	0	2.854E+2	5.003E-1	0	0
70	1.625E+2	1.571E+2	0	0	1.625E+2	1.571E+2	0	0
80	9.257E+1	9.257E+2	0	0	9.257E+1	9.257E+1	0	0
90	5.272E+1	5.272E+1	0	0	5.272E+1	5.272E+1	0	0
100	3.044E+1	3.002E+1	0	0	3.044E+1	3.002E+1	0	0
120	1.958E+1	9.741E+0	0	0	1.957E+1	9.741E+1	0	0
200	4.414E-1	4.349E-1	0	0	8.491E+1	8.487E+1	0	0
300	2.315E-1	1.197E-1	0	0	1.644E+2	8.459E+1	0	0
400	2.489E-1	2.364E-1	2.209E-7	0	1.692E+2	1.692E+2	2.209E-7	0
500	4.656E-1	2.369E-1	3.147E-9	0	2.539E+2	1.695E+2	3.147E-9	0
600	4.644E-1	3.548E-1	2.190E-11	0	2.539E+2	2.538E+2	2.190E-11	0
700	5.811E-1	5.160E-1	1.014E-13	0	3.384E+2	2.944E+2	1.014E-13	0
800	6.079E-1	5.798E-1	5.074E-16	1.625E-18	3.586E+2	3.384E+2	5.074E-16	1.625E-18
900	6.967E-1	6.930E-1	2.108E-18	2.321E-20	4.230E+2	4.203E+2	2.108E-18	2.321E-20
1,000	8.006E-1	6.955E-1	8.965E-11	1.589E-22	4.973E+2	4.231E+2	6.416E-8	1.589E-22
2,000	1.460E+0	1.454E+0	2.235E-1	1.008E-19	8.461E+2	8.461E+2	1.600E+2	7.232E-17
4,000	1.618E+0	1.617E+0	3.851E-1	1.699E-2	8.462E+2	8.462E+2	2.673E+2	1.218E+1
6,000	1.695E+0	1.695E+0	4.434E-1	1.698E-2	8.462E+2	8.462E+2	2.673E+2	1.218E+1
8,000	7.549E-1	8.278E-1	3.998E-1	1.781E-2	2.200E+2	2.722E+2	2.155E+2	1.218E+1
10,000	3.880E-1	3.880E-1	1.226E-1	1.034E-2	2.623E+1	2.623E+1	8.290E+0	3.891E+0

Table 5.5 Other Impacts Associated With Cases 1-3

Impacts	Case 1	Case 2	Case 3
Short-term population exposures: (man-mrem)			
Processing at waste generator**	-	-	-
Processing at regional processing center	0	0	0
Waste tranportation	5.10E+5*	5.10E+5	5.10E+5
Short-term occupational exposures: (man-mrem)			
Processing at waste generator**	-	-	-
Processing at regional processing center	0	0	0
Waste transportation	5.82E+6	5.82E+6	5.82E+6
Waste disposal	2.46E+6	2.46E+6	2.46E+6
Waste generation and transport costs: ($)			
Processing at waste generator**	-	-	-
Processing at regional processing center	0	0	0
Waste transportation	2.05E+8	2.05E+8	2.05E+8
Disposal costs: ($)			
Design & Operational	1.88E+8	1.88E+8	1.88E+8
Postoperational	3.82E+7	3.46E+7	4.99E+7
Total	2.26E+8	2.23E+8	2.38E+8
Unit ($/m^3)	231	227	243
Energy use: (gal)**	-	-	-
Land use: (m^2)	3.40E+5	3.40E+5	3.40E+5
Waste volume disposed: (m^3)			
Regular:			
Chemical-stable	9.26E+3	9.26E+3	9.26E+3
Chemical-unstable	1.15E+5	1.15E+5	1.15E+5
No chemical-stable	2.22E+5	2.22E+5	2.22E+5
No chemical-unstable	5.34E+5	5.34E+5	5.34E+5
Total	8.81E+5	8.81E+5	8.81E+5
Layered:			
Chemical-stable	9.62E+2	9.62E+2	9.62E+2
Chemical-unstable	1.87E+3	1.87E+3	1.87E+3
No chemical-stable	3.70E+2	3.70E+2	3.70E+2
No chemical-unstable	9.59E+4	9.59E+4	9.59E+4
Total	9.91E+4	9.91E+4	9.91E+4
Hot Waste Facility:	0	0	0
Total Disposed:	9.80E+5	9.80E+5	9.80E+5
Total volume not acceptable: (m^3)	1.94E+4	1.94E+4	1.94E+4

*The notation 5.10 E+5 means 5.10 x 10^5

**In this chapter, population exposures due to waste processing by waste generators, occupational exposures due to waste processing by waste generators, costs due to waste processing by waste generators, and energy use are presented as impacts and costs in addition to those associated with waste spectrum 1.

use in terms of total gallons of fuel; and committed land use. Total costs and impacts from processing, transport, and disposal of an entire spectrum of waste over 20 years are listed.

Ground-Water Impacts

As shown in Tables 5.3 and 5.4 the calculated doses are high for the base case. For Case 1, maximum doses to all organs, with the exception of the thyroid and bone are about 30 millirem at the intruder well, exceed 150 mrem at the boundary well, are on the order of 0.1 mrem at the population well, and are on the order of 10^{-2} to 10^{-3} mrem at the surface body water. Thyroid doses are in the range of 800 mrem at the intruder and population wells, 270 mrem at the population well, and 12 mrem at the surface water body. It is not likely that doses to actual individuals could ever be this high, notwithstanding the conservatism of the analysis. For one thing, potholes and depressions would be filled in by the site owner, thus reducing the percolation. In addition, ground-water movement of radionuclides would almost certainly be detected through monitoring wells long before appreciable exposures could be received by the public. A more important point is that a considerable amount of effort and cost to the site owner may be required to prevent such exposures from occurring. This is discussed in more detail later.

Table 5.4 provides an illustration of potential whole body and thyroid doses for Case 1 as a function of time. Exposures to whole body at the intruder and boundary wells are principally due to tritium, which constitutes (on a curie basis) the largest part of the radionuclide inventory at the reference disposal facility. Tritium has the largest leach fraction of the radionuclides considered and is also assumed to migrate with the speed of the ground water. Given the nature of the assumptions in the calculations, tritium leaves the disposed waste more or less as a slug flow. Due to dispersion, however, the edges of the pulse trail out. As the slug of contamination moves past the intruder well and then the boundary well, potential exposures at each well rise to a maximum and then fall to another low value. Tritium, however, has a relatively short half-life and due to radioactive decay has only a very minor impact at the population well and surface water body.

However, total impacts are from all radionuclides, each of which may have a different leach rate, retardation coefficient, and decay constant. The maximum concentration of each radionuclide in ground water therefore arrives at the access location of interest at different times--often at widely different times up to thousands of years. For example, typically following the tritium would be Tc-99 and I-129, followed by C-14. If graphed, the result would be typically a lumpy dose curve. As shown in Table 5.4 after an initial hump within a few hundreds of years, a low period is observed after which one or more humps are observed in the range of thousands of years. An exception is the thyroid, which illustrates a broad maximum which persists for long time periods. This dose is mainly a result of iodine-129.

As shown in Table 5.4, the calculated maximum exposures at the intruder well over 10,000 years occur at about 50 years following facility closure and are in the range of 500 millirem. However, prior to the assumed end of the 100-year

active institutional control period, the site owner would preclude inadvertent intrusion and possible construction and use of the intruder well. The maximum intruder well exposures for whole body are therefore determined to occur at about 100 years following disposal facility closure, or right at the assumed end of the active institutional control period. This results in larger whole body exposures at the boundary well than at the intruder well. Maximum thyroid exposures at the intruder well occur in the neighborhood of 4,000 years following facility closure.

Cases 2 and 3 illustrate the effect of some different assumptions regarding site-specific conditions. In Case 2, relatively low retardation coefficients are assumed, indicative of a sandy soil. The same sandy soil is used as a backfill around the waste packages, resulting in a reduced contact time with infiltrating rainwater. In Case 3, on the other hand, the soils in which the waste is disposed are assumed to be relatively impermeable, and have higher retardation coefficients than that of the reference facility. However, the same relatively tight soils are assumed to be backfilled into the disposal trenches. This results in relatively higher contact times with infiltrating precipitation. As can be seen in Table 5.3, Case 2 seems to generally exhibit somewhat lower exposures than Case 1 for the population well and surface water body. The opposite trend appears to occur at these two access locations for Case 3. For the intruder well and the boundary well, a clear-cut trend is not seen. Calculated exposures for Cases 2 and 3 are sometimes higher, and sometimes lower, than those for Case 1, depending upon the organ considered. For thyroid exposures at the boundary well, for example, calculated potential maximum exposures for Case 2 are about a factor of 3 lower than for Case 1. These calculated exposures occur over a very long time period, however--i.e., over a broad flat curve lasting greater than 9,000 years. Maximum thyroid exposures for Case 3 are in the same range as those calculated for Case 1 but the time period over which the maximum exposures occur is less pronounced.

This should not be interpreted to conclude that disposal sites having extremely permeable soils are the best for waste disposal or that sites having very impermeable soils should be avoided. The point is the importance of minimizing the quantity of radionuclides released from the waste. After the radionuclides have been released from the waste, the control one has over potential exposures is diminished. One has to depend upon ion-exchange properties in soil--properties which are difficult to predict with certainty.

The relative impacts of other options regarding near-surface waste disposal--that of reducing the quantity of water infiltrating into the trench and of reducing the radioactivity mobilized by the infiltrating water--is discussed extensively in subsequent cases. Prior to this, however, base case costs and short-term radiological impacts are examined for the three cases. This provides a basis against which other options may be compared.

5.2.2.1 Other Impacts

Base case costs and short-term radiological impacts are shown in Table 5.5 and consist of waste processing and transportation exposures, occupational exposures, costs, incremental energy use, and land use. Also shown are the waste volumes

disposed as well as individual and population intruder exposures to whole body and bone. Populational exposures from processing wastes at all generating facilities are not calculated for waste spectrum 1 as waste spectrum 1 is meant to represent conditions in which little or no waste processing is performed other than that required to meet safety requirements for transportation and disposal facility waste handling operations. In addition, such impacts are already considered as part of licensing such facilities. (This EIS is interested in the incremental exposures above the base case exposures.) Potential impacts from processing wastes at a regional processing center are also zero for the reference waste spectrum 1. (No regional waste processing is assumed to occur for waste spectrum 1.)

Total transportation population exposures are an estimated 510,000 man-millirem for 20 years delivery of waste to the disposal facility. This exposure was calculated assuming an average waste transport distance of 400 miles (one way) and an assumed population dose of 0.018 man-millirem per shipment per mile. In addition, each shipment is assumed to make one stop during the 400-mile trip, resulting in a population dose of 2.0 man-mrem per shipment stopover. The total population exposed is assumed to be 1.5×10^5 persons during transit and 500 persons per stopover.

Short-term occupational exposures are calculated as the total exposures over 20 years of (1) waste processing activities, (2) waste transportation, and (3) waste disposal. Occupational exposures from normal waste handling and packaging to meet DOT transportation requirements and to meet safety requirements at disposal facilities (e.g., specific packaging criteria for biological wastes, solidification of liquids) are not estimated for waste spectrum 1. These would be expected to vary widely among the many thousands of NRC and Agreement State licensees. However, additional potential exposures due to the additional waste treatment processes considered in waste spectra 2-4 are estimated as part of the impacts of these spectra. Occupational exposures due to waste transportation and waste disposal are estimated as about 5.82 and 2.46 man-millirem per m^3 of waste transported and disposed. Again, as no waste processing activities are assumed to take place at a regional processing center for waste spectrum 1, no occupational doses due to waste processing at the regional center are calculated for Cases 1-3.

Disposal facility occupational exposures are calculated as approximately 123,000 man-mrem/year. Assuming a total exposed working crew of about 45 persons, this calculates as an average estimated 2.73 rem per year per individual worker, which is within the general range of occupational exposures currently experienced at operating disposal facilities.

Costs are broken down into processing costs, transportation costs, and disposal costs. For waste spectrum 1, minimal waste processing is assumed to occur. The actual costs experienced by a waste generator are a function of many variables, including the characteristics of the waste processed, the volume of the waste processed, and the design of the waste processing equipment, if any. Processing costs are presented in this section as additional costs to those associated with waste spectrum 1.

Transportation costs may vary widely for different waste generators depending upon the distance from the waste generator to the disposal facility and the characteristics of the waste disposed. Information regarding the assumptions used to determine these costs are provided in Appendix G. For this EIS, a base case transportation cost of $205 million is estimated for transportation of about 50,000 m^3 of waste per year over 20 years ($209.2 per m^3 of waste).

Disposal costs are calculated in two parts: design and operational costs and postoperational costs. Design and operational costs are the fees charged by the disposal facility operator to pay for operating and overhead costs, and receive a return on investment. These costs are estimated at about $192/$m^3$ ($5.43/$ft^3$), which is about 18 cents/ft^3 higher than that presented in Table 4.3 for the reference facility. This is due to the assumption of the additional operational step of layering the higher activity waste to reduce potential intruder impacts.

Postoperational costs are fees assumed to be charged to the waste generator to ensure that sufficient funds will be available for facility closure and for long-term care, and are calculated as described in Appendix Q. As discussed in Appendix Q, funds for closure are assumed to be provided by the disposal facility licensee, but passed on to the disposal facility customers. The availability of sufficient funds for closure is assumed to be assured through a financial surety mechanism. Funds for 100 years of long-term care are assumed to be provided through a state-operated sinking fund. As shown, unit post-operational costs can, depending upon the case considered, range from $35/$m^3$ ($1.00/$ft^3$) to $51/$m^3$ ($1.44/$ft^3$).

The shear magnitude of the funds that would be needed to be collected over 20 years to ensure long-term care for the first three cases deserves special consideration--e.g., $50 million for Case 3. As discussed earlier, significant potential ground-water doses are estimated. These large calculated exposures result from the assumed practice of indiscriminately disposing of easily compressible, degradable waste streams (which frequently have only very low levels of contamination) with higher activity waste streams. These easily degradable waste streams (e.g., trash) frequently contain chemicals which may increase leaching and reduce sorption (ion exchange) of radionuclides during migration through ground water. As discussed earlier, these calculated levels of exposures are not likely to be actually realized. However, to prevent such potential exposures from occurring, a considerable amount of active site maintenance would be expected on the part of the site owner. It is difficult to predict how long this extensive site maintenance would be required or how much it would cost, although it is seen that many millions of dollars could be potentially involved.

It could be argued that it would be a simple matter to merely charge sufficient postoperational fees to provide for the required care. However, this concept has a number of drawbacks, including:

- There is no assurance that sufficient funds will be available for long-term care, or that funds collected will not be spent for other purposes. For example, the disposal facility may close prematurely and prior to collection of sufficient funds.

- There is no assurance that the extensive kinds of maintenance activities that would be required would actually be carried out in a timely manner. For example, at a site with very impermeable soils, subsidence could lead to disposal trenches filling up with water (the bathtub scenario), which could potentially be ignored until large expenditures were required to rectify the problem.

- Extensive site maintenance activities can lead to releases of quantities of radionuclides offsite. For example, if extensive water management activities such as removal and evaporation of large quantities of trench leachate are required (see Appendix Q), then offsite exposures will result. EPA has estimated that the potential impacts to a maximum exposed individual near a disposal facility evaporating about a million gallons of contaminated liquid per year to be in the neighborhood of 20 mrem (whole body) per year (Ref. 4).

Leaving a disposal facility in a condition so that extensive active maintenance activities are required to ensure public health and safety could result in a considerable financial burden to the site owner and to future generations.

Also shown in Table 5.5 is the estimated land use (3.4 E+5 m^2, or about 86 acres) to dispose of approximately one million m^3 of waste. In this chapter, energy use is presented in incremental gallons of equivalent fuel from that associated with Cases 1-3.

5.2.3 Need for Action

Based upon the results of the preceeding base case analysis and upon a review of existing experience and data regarding ground-water migration, a need for regulatory action is clearly indicated. That is, the no-action alternative is clearly unacceptable. For the further development of performance objectives and technical criteria to minimize potential ground-water impacts, four key factors can be set out:

1. Ground-water migration is very site-specific and depends on the meteorological, hydrological and geological conditions of the site;

2. Ground-water migration is enhanced by an unstable waste form which can lead to waste decomposition, trench collapse, and increased water infiltration. The long-term effects of an unstable waste form and resulting unstable site conditions are difficult to predict;

3. Unstable site conditions at some sites can lead to remedial action programs directed at minimizing potential long-term environmental releases. The programs can result in short-term environmental releases, considerable expenditures of funds which were not planned for at the time the facility was opened, and the possibility that such "active maintenance" programs will have to be carried out over an uncertain time period at uncertain high costs;

4. The potential for migration is increased by the extended contact of water with waste both during operations and after closure.

It is also apparent that potential long-term groundwater migration cannot be analyzed by only considering potential radiological impacts. The need for long-term social commitment to care for sites over the long term and to maintain potential radiological impacts to low levels must also be considered. Two related concepts which impact upon the potential for long-term radiological releases and upon the need for long-term social commitment are: (1) the stability of the waste form and disposal site, and (2) the predictability of the potential radiological impacts. Unless the waste and the disposal site are stable over time, it is difficult to predict the long-term radiological impacts of disposal, or the activities (maintenance, monitoring, etc.) and associated costs required to maintain potential impacts to low levels. If long-term radiological impacts and activities required by a site owner cannot be predicted, then it is difficult to assure the long-term protection of public health and safety, or to assure that future generations will not be burdened by large expenses to maintain a disposal site in a safe condition.

The unpredictable nature of waste/disposal site instability can lead to increased radiological and economic impacts at both humid and arid sites. At humid sites, stable disposal cell covers are needed to minimize water infiltration through the covers and thus maintain potential ground-water releases to levels as low as reasonably achievable. In cohesive, poorly drained soils the inherent longer contact time of infiltrating water leads to greater expected corrosion and decomposition rates than in well-drained permeable soils where the contact time would be less. One is basically trading greater leaching and higher ion-exchange rates in low permeable soils with smaller leaching (lower contact times) and lower ion-exchange rates in higher permeable soils. Waste instability in poorly drained soils can especially lead to a potential "bathtub" problem, which can further lead to costly trench pumping and site stabilization programs. In arid sites, trench instability can lead to subsidence and increased plant and animal intrusion plus increased potential for wind erosion and dispersion of trench contents. For example, at a government-operated disposal facility located on the arid Hanford Reservation, there was an occurrence in which boxes of disposed waste collapsed, resulting in a depression in the trench cover which exposed disposed waste. Portions of this exposed waste were subsequently dispersed by high winds.

Three factors contribute to waste form/disposal site instability, the contact of water with waste, and the resulting long-term radiological and economic consequences.

- site environment;
- site design and operations; and
- waste form.

To consider the maximum potential impacts from waste disposal, the base case site analyzed is a humid site, although as stated above, waste/site instability is also important at arid sites. Variations to site designs and operating practices can lead to greater site stability and minimize long-term migration.

Some of these variations include: (1) segregation of compressible wastes and wastes containing large quantities of organic chemicals or chelating agents, (2) thicker, less permeable disposal cell covers, (3) improved compaction of disposal cell covers, (4) stacked disposal of waste rather than random disposal, (5) grouting of disposed wastes, and (6) use of engineered structures such as concrete walled trenches.

The waste form is probably the most significant factor contributing to site stability--a factor containing the paradox that much if not most of the problems with site instability and high maintenance costs is caused by the wastes containing the least activity. Most of the waste sent to LLW disposal facilities consists of very low activity material such as trash which is frequently easily degradable. In the past, some of this waste has been packaged in easily degradable packages such as card board boxes. Most of the waste, however, is currently packaged in longer lasting, but still degradable, rigid containers such as wooden boxes and 55-gallon steel drums. Large void spaces can also exist within waste packages and the disposal cells after waste disposal. As the waste material degrades and compresses, a process which is accelerated by contact by water, additional voids are produced. This leads to settlement of the disposal cell contents, followed by subsidence or slumping of the disposal cell cover. This increases the percolation of water into disposal cells, accelerating the cycle. This slumping and subsidence is frequently quite sudden.

The use of the rigid containers would be expected to reduce the amount of short-term subsidence. Over the longer term, however, subsidence problems would still be observed, and factors contributing to this include: (1) the waste contained in the rigid containers is still frequently easily degradable, and (2) even if the waste is not readily degradable (e.g., activated alloy metal), it is frequently packaged into containers so that large voids are left within the containers. The rigid containers initially provide some structural support to the disposal cell covers, and act to "bridge" voids within the disposal cell and waste packages. (These voids may exist initially within the disposal cell and waste packages or may be produced as a result of waste decomposition.) Eventually, however, this structural support is lost as the rigid containers rust or rot out, leading to disposal cell settling at rates which are difficult to predict. The basic problem is the voids. If a waste container were completely filled with relatively nondegradable, noncompressible materials--e.g., activated metal with void spaces within the container filled with sand--then degradation of the waste package would not be expected to result in a subsidence problem.

In the following section, a number of cases are analyzed to investigate the cost-effectiveness of different ways in which to achieve improved disposal facility stability, reduce radionuclide migration, and minimize long-term social commitment in carrying out active maintenance programs. In these cases, the reference disposal facility (moderately permeable soils,) is assumed. The potential relative costs and impacts of variations in disposal facility design and operating practices are first investigated, followed by the potential relative costs and impacts of improvements in waste form.

5.2.4 Alternatives to the Base Case

The following description of alternatives considers a wide range of potential improvements that can be applied to design and operations to improve waste and site stability and to reduce the contact of waste by water. Eight major cases are examined, with variations on some cases also examined as appropriate. These cases include the following:

Case 1A - Use of sand backfill
Case 4 - Operationally improved case
Case 5 - Concrete walled trenches
Case 6 - Decontainerized disposal of compressible waste
Case 7 - Use of improved waste forms
Case 8 - Use of further improved waste forms
Case 9 - Walled trenches and further improved waste forms
Case 10 - High integrity containers

Case 1A is included to illustrate use of a sand backfill around waste packages to minimize contact time of percolating water with disposed waste. The disposal facility design and operating practices are assumed to be identical to Case 1. Waste spectrum 1 is also assumed.

Case 4 is included to illustrate a range of improvements to disposal facility design and operation without improvements in waste form. This case is composed of 5 subcases in which successive additional disposal facility design options are added, including (in order): waste segregation, improved compaction of the disposal cell cover, a thick clay cover, stacking of waste, and use of a hot waste facility.

Case 5 involves use of a highly engineered disposal technique to provide disposal facility stability. The waste is segregated, stacked within concrete walled trenches, and then grouted in place. A concrete trench floor and a one meter thick concrete cap is also provided in addition to a thick compacted clay cap. This case--a concrete walled trench--would be expected to involve costs similar to an above-ground engineered structure.

Case 6 is included to examine an alternative method of disposing of compressible wastes other than by extensive pretreatment operations. In this case, compressible wastes are delivered to the disposal facility in reusable containers. At special (segregated) trenches, the wastes are emptied out and compacted by heavy machinery. The wastes are periodically covered by a soil layer which is also compacted. To eliminate wind scatter, operations are conducted under an air support building.

This alternative is assumed to require a presorting operation to exclude sealed sources, activated metal, or other high radiation sources. Even so, worker exposures for such operations are expected to be high. The advantage of this operation is that since there are no rigid containers and trench voids are reduced, it may be possible to arrive at a stable site within a few years. However, higher maintenance activities would be initially expected until stability is achieved.

Case 7 is similar to Case 4 except that an improved waste form is used--i.e., waste spectrum 2. This spectrum represents a number of improved waste forms which can be implemented in a reasonably short time period. All liquids, filter sludges, and resins are solidified in improved waste forms (half cement and half synthetic polymer). Compressible wastes are compacted, which results in an improved waste form for these wastes. Higher activity wastes such as LWR noncompactible trash are packaged in a manner which resists compression over the long term.

This case consists of four subcases. Case 7A is similar to Case 1A in that the waste packages are assumed to be disposed without consideration of segregated disposal of compressible wastes and wastes containing organic chemicals or chelating agents. Cases 7B, 7C, and 7D are similar to Cases 4A, 4B, and 4C and include the following successive disposal facility design options: waste segregation, improved compaction of the disposal cell covers, and use of a thicker clay cover.

Case 8 is similar to Case 7D except that a further improved waste form is used--i.e., waste spectrum 3. This spectrum represents about the best overall waste form which can be reasonably implemented using existing technology. However, it is expensive and requires time to implement. In this spectrum, compressible wastes are incinerated and solidified. Liquids, resins, and filter sludges are also solidified. The solidification media is assumed to be a synthetic polymer. This spectrum generally provides a very stable waste form. This case represents minimal impacts and long-term maintenance costs at relatively high waste treatment costs.

Case 9 is similar to Case 5 and is included to illustrate use of extreme (expensive) measures to minimize migration and long-term maintenance requirements. Stability is achieved by both the waste form (waste spectrum 3) and the disposal operations (walled and grouted disposal trenches).

Case 10 is included to illustrate use of high-integrity containers (HICs) to package and dispose of certain waste streams. Case 10 consists of three subcases using similar disposal facility designs as Cases 4C and 7D.

5.2.4.1 Case 1A - Use of Sand Backfill

The following cases investigate use of a number of options for waste form, waste packaging, and disposal facility design and operation to increase disposal facility stability and to minimize radionuclide migration. To do this, the cases principally investigate methods to reduce percolation of water into disposal cells and/or reduce migration of radionuclides from disposed waste streams through improved waste forms (e.g., through solidification) or packaging.

Case 1A, on the other hand, follows from Case 2 and investigates use of a sand backfill around disposed waste packages. This reduces the contact time of percolating water and therefore reduces leaching of radionuclides from the waste packages. Since the sand fill would tend to readily flow into interstitial spaces between waste packages during backfill operations, some reduction in trench voids would also be expected to occur. The potential usefulness of this technique was previously alluded to during the discussion on Cases 1-3.

For Case 1A, the disposal facility design is assumed to be essentially the same as Case 1, and is summarized on Table 5.1. Waste packages are randomly disposed into disposal cells, with no segregation of compressible waste streams or waste streams containing organic chemicals or chelating agents. A thin earth cover is placed over the disposed wastes, and is subjected to indifferent compaction. Instead of backfilling the disposal cells with excavated soil, however, a clean sand fill is used for this purpose. In addition, a 0.3 m (1 ft) thick layer of sand is placed on the bottom of the disposal cell prior to waste emplacement. The waste is emplaced to within one meter of the top of the disposal cell, and then backfilled with sand to the level of the top of the cell. The cap is then emplaced. The sand fill is assumed to be obtained from a local borrow area and is stockpiled onsite until used.

Ground-Water Impacts

Ground-water impacts for Case 1A are shown in Table 5.6. In comparison with Case 1, use of the sand backfill reduces maximum ground-water impacts by about a factor of 10. In the analysis, the contact time is calculated as follows:

$t_c = \rho/nv$, where

p = the precipitation (m/yr) that infiltrates into a disposal cell and comes into contact with the disposed waste.

n = waste disposal cell effective porosity

v = speed of the percolating water (m/yr)

Table 5.6 Maximum Ground-Water Impacts Associated with Case 1A

	(mrem/yr)						
Case	Body	Bone	Liver	Thyroid	Kidney	Lung	GI
(1A)							
Intruder Well	3.044E+0 (100)	3.063E-1 (6,000)	3.044E+0 (100)	8.462E+1 (4,000)	3.044E+0 (100)	3.044E+0 (100)	3.044E+0 (100)
Boundary Well	1.571E+1 (70)	3.061E-1 (6,000)	1.571E+1 (70)	8.462E+1 (4,000)	1.571E+1 (70)	1.571E+1 (70)	1.571E+1 (70)
Population Well	4.845E-2 (10,000)	7.115E-2 (10,000)	2.516E-2 (10,000)	2.674E+1 (8,000)	4.290E-2 (10,000)	1.432E-2 (10,000)	3,229E-2 (10,000)
Surface Water	2.190E-3 (10,000)	3.166E-3 (10,000)	1.128E-3 (10,000)	1.219E+0 (10,000)	1.934E-3 (10,000)	6.345E-4 (10,000)	1.445E-3 (10,000)

For the reference disposal facility soils, a waste disposal cell effective porosity of about 25% is conservatively assumed. The speed of the percolating water is assumed to be about one foot per day, which corresponds to a permeability of about 10^{-4} cm/sec. For the sand backfill, the speed of the percolating water is assumed to be raised to about 10 ft/day.

Although lower impacts are calculated for this case, it should be recognized that the sand backfill can be a useful conjunction to a stable disposal facility but cannot be a replacement to a stable disposal facility. For one reason, the use of the backfill is effective for only so long as the percolating water can drain through the bottom of the disposal cells. If the rate at which the water drains through the bottom of the disposal cells is less than the percolation rate, water will tend to collect in the bottom of the disposal cells. If sufficient water collects to inundate the disposed waste packages, then of course the advantage of using the sand backfill is lost. As discussed previously, for Cases 1-3, this may especially be of concern for disposal facilities having highly impermeable soils. This "bath tub" scenario may potentially lead to over flow of leachate from disposal cells. At the least, it will lead to considerably higher long-term maintenance activities and costs.

Other Impacts

Other impacts associated with this case are listed in Table 5.7. Compared with Case 1, the principal change is in disposal costs. Design and operation costs are raised from $188 million to $195 million, total disposal costs raised from $226 million to $233 million, and unit costs raised from $231/m^3 to $238/m^3. Since the use of the sand backfill is not believed to materially increase the stability of the disposal facility, long-term care costs are still projected to be at a high level. Energy use is also raised somewhat.

5.2.4.2 Case 4 - Operationally Improved Case

Case 4 examines the costs and impacts associated with a range of moderate facility operational changes which are intended to improve site stability and reduce percolation. The waste form is assumed to be unchanged from Cases 1-3. The five subcases of Case 4 are summarized in Table 5.8. Relative to the reference facility in Case 1A, the following operational changes are made in each of the 5 subcases of Case 4:

Case 4A. In this case, easily compressible waste streams as well as waste streams containing significant quantities of chelating agents are assumed to be disposed in a segregated manner (e.g., separate disposal trenches) from other waste streams.

Case 4B. In addition to segregation of the compressible waste streams and waste streams containing chelating agents, the disposal trench covers containing unstable waste streams are assumed to be subjected to improved compaction techniques.

Case 4C. This case is similar to Case 4B except that improved disposal trench covers are assumed to be emplaced, which are also subjected to improved compaction techniques.

Table 5.7 Comparison of Other Impacts Associated with Case 1A

Short-term population exposures: (man-mrem)	
Processing at waste generator	-
Processing at regional processing center	0
Waste transportation	5.10E+5
Short-term occupational exposures: (man-mrem)	
Processing at waste generator	-
Processing at regional processing center	0
Waste transportation	5.82E+6
Waste disposal	2.46E+6
Waste generation and transport costs: ($)	
Processing at waste generator	-
Processing at regional processing center	0
Waste transportation	2.05E+8
Disposal costs: ($)	
Design and operation	1.95E+8
Postoperational	3.82E+7
Total	2.33E+8
Unit ($/m^3)	238
Energy use: (gal)	+2.00E+5
Land use: (m^2)	3.40E+5
Waste volume disposed: (m^3)	
Regular:	
Chemical-stable	9.26E+3
Chemical-unstable	1.15E+5
No Chemical-stable	2.22E+5
No Chemical-unstable	5.34E+5
Total	8.81E+5
Layered:	
Chemical-stable	9.62E+2
Chemical-unstable	1.87E+3
No Chemical-stable	3.70E+2
No Chemical-unstable	9.59E+4
Total	9.91E+4
Hot Waste Facility:	0
Total Disposed	9.80E+5
Total not acceptable: (m^3)	1.94E+4

Table 5.8 Five Subcases of Case 4

Case 4A - Operationally Improved Case: Segregation

- Regular SLB trench
- Waste spectrum 1
- SLB with a thin cap
- Segregation of wastes containing chelates
- Segregation of compressible wastes
- Random disposal of waste with a sand backfill
- Layering used as an intruder barrier

Case 4B - Operationally Improved Case: Segregation plus Compaction

- Regular SLB trench
- Waste spectrum 1
- SLB with a thin cap
- Compaction using improved methods
- Segregation of wastes containing chelates
- Segregation of compressible wastes
- Random disposal of waste with a sand backfill
- Layering used as an intruder barrier

Case 4C - Operationally Improved Case: Segregation, Compaction, and Improved Covers

- Regular SLB trench
- Waste spectrum 1
- SLB with a thicker clay cap
- Compaction using improved methods
- Segregation of wastes containing chelates
- Segregation of compressible wastes
- Random disposal of waste with a sand backfill
- Layering used as an intruder barrier

Case 4D - Operationally Improved Case: Segregation, Compaction, Improved Covers, Stacked Disposal

- Regular SLB trench
- Waste spectrum 1 SLB with a thicker clay cap
- Compaction using improved methods
- Segregation of wastes containing chelates
- Segregation of compressible wastes
- Stacked disposal of waste with a sand backfill
- Layering used as an intruder barrier

Case 4E - Operationally Improved Case: Hot Waste Facility

- Regular SLB trench
- Waste spectrum 1
- SLB with a thicker clay cap
- Compaction using improved methods
- Segregation of wastes containing chelates
- Segregation of compressible wastes
- Stacked disposal of waste with a sand backfill
- Hot waste facility for problematical wastes
- Layering used as an intruder barrier for other wastes.

Case 4D. This case is similar to Case 4C except that instead of random disposal, the waste is assumed to be stacked in the disposal cells.

Case 4E. This case is included to investigate the costs and impacts of addition of a "hot waste facility" to dispose of some high activity waste streams which would otherwise be excluded from near-surface disposal. In this case, the hot waste facility is assumed to be a cement walled trench. Except for the assumed addition of the hot waste facility, this case is identical to Case 4D.

Ground-Water Impacts

Estimated maximum ground-water impacts at each of the access locations considered for each of the 5 subcases of Case 4 are summarized in Table 5.9. As shown, for each improvement in disposal facility design and operation, generally reduced ground-water impacts are observed. Over Cases 4A through 4D, whole body exposures drop from 0.8 mrem/yr to 0.02 mrem/yr at the intruder well, from 4 mrem/yr to 0.07 mrem/yr at the boundary well, from 0.05 mrem/yr to 0.005 mrem/yr at the population well, and from 0.002 mrem/yr to 2. E-4 mrem/yr at the surface water access location. Similarly, thyroid exposures drop from 80.5 mrem/yr to 8.3 mrem/yr at the intruder and boundary wells, from 25.4 mrem/yr to 2.6 mrem/yr at the population well, and from 1.2 mrem/yr to 0.1 mrem/yr at the surface water access location.

Relative to Case 1A, lower exposures are calculated for Case 4A for the intruder and boundary wells, resulting from segregation of the stable waste streams from the unstable waste streams and waste streams containing organic chemicals or chelating agents. Lower exposures (than Case 1A) are also observed at the other two access locations: the population well and the surface stream.

In Cases 1-3 and 1A, since all waste streams are mixed together during disposal, all streams experience high (twice natural percolation) percolation rates. Leaching of all solidified waste forms is enhanced by the presence of organic chemicals and chelating agents and the retardation coefficients of the migrating radionuclides are reduced (e.g., from NRET = 3 to NRET = 2, see Appendix G). In Case 4A, however, the stable waste streams are segregated from unstable streams and wastes containing significant quantities of chelating agents and organic chemicals are also disposed in a segregated manner. In this case, since the disposal cells containing the stable waste streams would not experience significant subsidence problems, percolation into these disposal cells is reduced (to the natural percolation of the disposal facility site). The disposal cells containing the compressible waste streams, however, still experience the higher (twice natural percolation) percolation rates. Similarly, the increased leaching of solidified wastes and reduced ion-exchange capacity (reduced retardation) is applied only to the segregated waste streams in the disposal cells containing significant quantities of chelating agents and organic chemicals.

It should be noted that about 76% of the wastes in waste spectrum 1 are in an unstable waste form, including higher activity waste streams such as LWR ion exchange resins (P-IXRESINS and B-IXRESINS) and industrial radioisotope

Table 5.9 Estimated Maximum Radiological Ground-Water Impacts for Cases 4A Through 4E.

	(mrem/yr)						
Cases	Body	Bone	Liver	Thyroid	Kidney	Lung	GI
(4A)							
Intruder	7.719E-1	2.931E-1	7.719E-1	8.051E+1	7.719E-1	7.719E-1	7.719E-1
Well	(100)	(6,000)	(100)	(4,000)	(100)	(100)	(100)
Boundary	3.985E+0	2.929E-1	3.985E+0	8.051E+1	3.985E+0	3.985E+0	3.985E+0
Well	(70)	(6,000)	(70)	(4,000)	(70)	(70)	(70)
Population	4.617E-2	6.805E-2	2.401E-2	2.544E+1	4.091E-2	1.369E-2	3.084E-2
Well	(10,000)	(10,000)	(10,000)	(10,000)	(10,000)	(10,000)	(10,000)
Surface	2.087E-3	3.028E-3	1.077E-3	1.160E+0	1.844E-3	6.068E-4	1.380E-3
Water	(10,000)	(10,000)	(10,000)	(10,000)	(10,000)	(10,000)	(10,000)
(4B)							
Intruder	7.654E-1	1.661E-1	7.654E-1	4.541E+1	7.654E-1	7.654E-1	7.654E-1
Well	(100)	(6,000)	(100)	(4,000)	(100)	(100)	(100)
Boundary	3.952E+0	1.660E-1	3.952E+0	4.541E+1	3.952E+0	3.952E+0	3.952E+0
Well	(70)	(6,000)	(70)	(4,000)	(70)	(70)	(70)
Population	2.607E-2	3.855E-2	1.358E-2	1.435E+1	2.310E-2	7.756E-3	1.743E-2
Well	(10,000)	(10,000)	(10,000)	(6,000)	(10,000)	(10,000)	(10,000)
Surface	1.179E-3	1.715E-3	6,088E-4	6.540E-1	1.041E-3	3.437E-4	7.796E-4
Water	(10,000)	(10,000)	(10,000)	(10,000)	(10,000)	(10,000)	(10,000)
(4C)							
Intruder	2.487E-2	4.517E-2	2.156E-2	1.238E+1	2.235E-2	2.156E-2	2.156E-2
Well	(6,000)	(6,000)	(100)	(4,000)	(6,000)	(100)	(100)
Boundary	1.113E-1	4.503E-2	1.113E-1	1.238E+1	1.113E-1	1.113E-1	1.113E-1
Well	(70)	(6,000)	(70)	(4,000)	(70)	(70)	(70)
Population	7.096E-3	1.045E-2	3.690E-3	3.911E+0	6.287E-3	2.103E-3	4.739E-3
Well	(10,000)	(10,000)	(10,000)	(6,000)	(10,000)	(10,000)	(10,000)
Surface	3.147E-4	4.347E-4	1.594E-4	1.783E-1	2.773E-4	8.713E-5	1.060E-4
Water	(10,000)	(10,000)	(10,000)	(10,000)	(10,000)	(10,000)	(10,000)
(4D)							
Intruder	1.643E-2	2.933E-2	1.437E-2	8.252E+0	1.474E-2	1.437E-2	1.437E-2
Well	(6,000)	(6,000)	(100)	(4,000)	(6,000)	(100)	(100)
Boundary	7.420E-2	2.923E-2	7.420E-2	8.252E+0	7.420E-2	7.420E-2	7.420E-2
Well	(70)	(6,000)	(70)	(6,000)	(70)	(70)	(70)
Population	4.697E-3	6.799E-3	2.426E-3	2.607E+0	4.157E-3	1.368E-3	3.126E-3
Well	(10,000)	(10,000)	(10,000)	(10,000)	(10,000)	(10,000)	(10,000)
Surface	2.084E-4	2.829E-4	1.049E-4	1.188E-1	1.835E-4	5.671E-5	1.359E-4
Water	(10,000)	(10,000)	(10,000)	(6,000)	(10,000)	(10,000)	(10,000)

Table 5.9 (continued)

Cases	Body	Bone	Liver	Thyroid	Kidney	Lung	GI
	(mrem/yr)						
(4E)							
Intruder Well	1.645E-2 (6,000)	2.947E-2 (6,000)	1.437E-2 (100)	8.252E+0 (4,000)	1.477E-2 (6,000)	1.437E-2 (100)	1.437E-2 (100)
Boundary Well	7.420E-2 (70)	2.937E-2 (6,000)	7.420E-2 (70)	8.252E+0 (6,000)	7.420E-2 (70)	7.420E-2 (70)	7.420E-2 (70)
Population Well	4.703E-3 (10,000)	6.829E-3 (10,000)	2.432E-3 (10,000)	2.607E+0 (6,000)	4.163E-3 (10,000)	1.374E-3 (10,000)	3.132E-3 (10,000)
Surface Water	2.087E-4 (10,000)	2.841E-4 (10,000)	1.051E-4 (10,000)	1.188E-1 (6,000)	1.837E-4 (10,000)	5.695E-5 (10,000)	1.362E-4 (10,000

production wastes (N-ISOPROD). Therefore, the effectiveness of segregated disposal of stable waste streams is not as significant as it would be if the higher activity waste streams were stabilized. This is especially observed in the thyroid exposures, which are principally the result of iodine-129. In the waste source data base used in this EIS, most of the iodine-129 is estimated to be contained in the 7 LWR process waste streams (P-IXRESIN, P-FSLUDGE, P-CONCLIQ, P-FCARTRG, B-IXRESIN, B-CONCLIQ, B-FSLUDGE). Of these, only the P-CONCLIQ and B-CONCLIQ waste streams are in a stable form in waste spectrum 1.

In Case 4B, the covers of the disposal cells containing the segregated compressible waste streams are subjected to improved compaction using heavy machinery such as a vibratory compactor. This is an inexpensive additional operational step and results in an estimated reduction of migration from the unstable cells by a factor of about 2. This results in a minor reduction in whole body exposures and a more significant reduction (by a factor of about 2) of thyroid exposures at the intruder and boundary wells. This is because most of the boundary well whole body dose is due to tritium, and most of the tritium delivered to the reference disposal facility is contained in two relatively small volume waste streams (N-TRITIUM and N-TARGETS). These streams are already assumed to be stable, and because stable waste streams are segregated and disposal cells containing stable waste streams are not subjected in Case 4B to the improved compaction, there is no reduction (relative to Case 4A) in percolation into the disposal cells. This effect is not seen at the other two access locations due to the extensive decay of the tritium before the contaminated ground water reaches the other two access locations (The ground-water travel times between the boundary well and the other two access locations are 334 years for the population well and 734 years for the surface water.)

However, since most of the iodine-129 is contained in unstable waste streams, compacting the disposal cells containing the unstable waste streams results in a more significant reduction in thyroid dose at the intruder and boundary wells.

Since iodine-129 has a very long half life, a similar relative reduction in thyroid dose relative to Case 4A is seen for the population well and the surface water.

In Case 4C, additional clay soil is assumed to be transported to the disposal facility from an offsite borrow area. This clay soil is emplaced and compacted in relatively thin (8 to 12 inch) layers over the disposal cells containing the unstable waste streams, raising the thickness of the disposal cell covers by two meters. The same thickness of compacted clay soil is placed over the disposal cells containing the stable waste streams. As a result, during the 100 year active institutional control period, percolation into the disposal cells containing the segregated stable waste streams is assumed to be reduced to 30 mm, while the percolation into the disposal cells containing the compressible waste streams is reduced to 60 mm. Compared to Case 4B, then, overall percolation into the disposal cells is reduced by a factor of about 6. However, at the end of the active institutional control period, a breakdown in institutional controls is assumed to occur. At this point, due to intrusion by humans, the percolation into 10% of the disposal cells is increased to 180 mm (the natural percolation of the site). The remainder of the disposal cells, due to intrusion by deep-rooted plants and burrowing animals, experience a general increase in percolation of twice the former value (i.e., 60 mm for the stable waste disposal cells and 120 mm for the unstable waste disposal cells).

The effects of this case are most seen in the boundary well exposures for the whole body and other organs (except thyroid). In the calculations, the percolation rate is squared (See Appendix G), and a reduction in the percolation by a factor of 6 into the disposal cells containing the stable waste streams results in an estimated reduction in tritium migration from the stable disposal cells by a factor of 36. Hence, whole body exposures due to tritium at the intruder and boundary wells are reduced by a factor of about 36. Considering that the full effectiveness of the additional compacted cover is only assumed for 100 years, this would appear to indicate that it only requires a relatively short hold-up of large quantities of tritium to considerably reduce potential boundary well exposures.

The reduction in impacts for whole body and other organs relative to Case 4B is less significant for the other two access locations. This is again due to decay of the tritium while being carried by ground water. Exposures at the population well and surface water access location are dominated by releases from the disposed unstable waste streams. As expected, since the waste streams containing most of the iodine-129 are still in an unstable form, thyroid exposures are reduced at each biota access location by about a factor of somewhat less than 4. In this case, thyroid exposures at the intruder and boundary wells and exposures to all organs at the other two access locations are dominated by the increased percolation rates experienced after the end of the active institutional control period.

Case 4D is similar to Case 4C with the exception that instead of random disposal, the waste containers are assumed to be neatly stacked into the disposal cells. Disposal efficiency is assumed to be increased by a factor of 1.5 from 0.5 to

0.75. In the calculations, the total volume of water percolating into the disposal cells is given by the percolation rate multiplied by the surface area of the disposal cells. Increasing the disposal efficiency by a factor of 1.5 reduces the surface area of the disposed waste by a factor of 1.5. This results in a calculated reduction in exposures at the 3 access locations by a factor of 1.5, as shown in Table 5.9.

As a result of the increased disposal efficiency, potential intruder impacts are also increased by a factor of 1.5. This results in one small volume (800 m^3 over 20 years) waste stream, L-NFRCOMP, being listed as unacceptable in Case 4D. Therefore, Case 4E investigates use of a "hot waste facility" for this waste stream. For this analysis, the hot waste facility is assumed to be a grouted cement walled trench. As can be seen in Table 5.9 only a minor increase in ground-water impacts are calculated from disposal of this waste stream within a hot waste facility.

Other Impacts

Other impacts for these cases are summarized in Table 5.10. Since waste spectrum one is used for the 5 subcases of Case 4, there is seen in Table 5.9 to be no change from the previously calculated values for several of the impact measures. These include population exposures for waste processing and transportation, occupational exposures due to waste processing, and costs due to waste processing and waste transportation. Other impacts and costs, however, are somewhat altered.

One example is occupational exposures. Waste transportation occupational exposures are the same in all subcases to those estimated for Cases 1-3 with the exception of Case 4D. In this case, the waste is assumed to be stacked in the disposal cells. This results in slightly higher intruder impacts, sufficient to make one stream, L-NFRCOMP, listed as unacceptable. This reduction in 800 m^3 of waste delivered to the site results in lower transportation occupational exposures for this case.

Disposal facility occupational exposures are calculated to be approximately 2.46 million man-millirem for Cases 4A through 4C, which is the same as that calculated for Cases 1 through 3, but rise to 5.21 million man-millirem for Cases 4D and 5.27 million man-millirem for Case 4E. The values calculated for Case 4A arise from the expectation that waste segregation is not expected to result in significant additional occupational exposures. Waste that would be contact-handled would still be contact-handled, while waste such as high activity resins that must be hoisted into place would still be handled in the same manner. The main difference is that the disposal facility would operate two or more disposal cells instead of one and there would have to be an additional determination at the time of waste receipt and inspection regarding the disposal status of the different waste forms. This determination, however, would not have to be performed in a radiation field. Additional exposures could result from the probable increased waste storage requirements, but most wastes thus stored would probably be of lower activity.

Table 5.10 Other Impacts Associated With Cases 4A Through 4E

Impacts	Case 4A	Case 4B	Case 4C	Case 4D	Case 4E
Short-term population exposures: (man-mrem)					
Processing at waste generator	-	-	-	-	-
Processing at regional processing center	0	0	0	0	0
Waste transportation	5.10E+5	5.10E+5	5.10E+5	4.94E+5	5.10E+5
Short-term occupational exposures: (man-mrem)					
Processing at waste generator	-	-	-	-	-
Processing at regional processing center	0	0	0	0	0
Waste transportation	5.82E+6	5.82E+6	5.82E+6	5.74E+6	5.82E+6
Waste disposal	2.46E+6	2.46E+6	2.46E+6	5.21E+6	5.27E+6
Waste generation and transport costs: ($)					
Processing at waste generator	-	-	-	-	-
Processing at regional processing center	0	0	0	0	0
Waste transportation	2.05E+8	2.05E+8	2.05E+8	2.01E+8	2.05E+8
Disposal costs: ($)					
Design and Operational	2.01E+8	2.01E+8	2.10E+8	2.22E+8	2.25E+8
Postoperational:	*	*	*	*	*
Total:	*	*	*	*	*
Unit ($/m^3)	223-244	223-244	233-253	245-266	248-268
Energy use: (gal)	+3.00E+5	+3.00E+5	-	4.00E+5	-2.00E+5
Land Use: (m^2)	3.40E+5	3.40E+5	3.40E+5	2.27E+5	2.27E+5
Waste volume disposed: (m^3)					
Regular:					
Chemical-stable	1.02E+4	1.02E+4	1.02E+4	1.02E+4	1.02E+4
Chemical-unstable	1.15E+5	1.15E+5	1.15E+5	1.15E+5	1.15E+5
No chemical-stable	2.23E+5	2.23E+5	2.23E+5	2.23E+5	2.23E+5
No chemical-unstable	5.34E+5	5.34E+5	5.34E+5	5.34E+5	5.34E+5
Total	8.82E+5	8.82E+5	8.82E+5	8.82E+5	8.82E+5

Table 5.10 (Continued)

Impacts	Case 4A	Case 4B	Case 4C	Case 4D	Case 4E
Layered:					
Chemical-stable	0	0	0	0	0
Chemical-unstable	1.87E+3	1.87E+3	1.87E+3	1.87E+3	1.87E+3
No chemical-stable	0	0	0	0	0
No chemical-unstable	9.59E+4	9.59E+4	9.59E+4	9.51E+4	9.51E+4
Total	9.77E+4	9.77E+4	9.77E+4	9.70E+4	9.70E+4
Hot waste facility:	0	0	0	0	0
Total disposed:	9.80E+5	9.80E+5	9.80E+5	9.79E+5	9.80E+5
Total volume not acceptable: (m^3)	1.94E+4	1.94E+4	1.94E+4	2.02E+4	1.94E+4

*Postoperational (closure and long-term care) costs are estimated to range from approximately $18.1 million to $38.2 million. In general, the higher end of the range would be associated with Case 4A and the lower end of range would be associated with Cases 4D and 4E. Total costs are therefore estimated to range as follows:

4A	4B	4C	4D	4E
2.19-2.39E+8	2.19-2.39E+8	2.28-2.48E+8	2.40-2.60E+8	2.43-2.63E+8

The additional operational steps for Cases 4B and 4C, which involve improved compaction for the former case and thicker disposal cell covers for the latter, are also not expected to result in significant additional exposures. For these cases, additional time would be spent on top of the disposal cells while installing the disposal cell covers. However, the disposal cell covers would provide considerable shielding (e.g., by a factor of about 1200 for every meter of soil) and any additional exposures would be small.

As shown for Cases 4D and 4E, however, a site operational procedure in which all waste containers are neatly stacked would be expected to increase occupational exposures by a factor of somewhat greater than 2. This may be an overestimate, however. At currently operating disposal facilities, a mixture of random and stacked disposal is generally used. High surface activity wastes and boxed low activity wastes are generally stacked (or otherwise emplaced in a neat manner using cranes or forklifts) while drummed low activity waste is generally disposed randomly. Additional stacking procedures would generally involve the lower activity waste streams. If waste segregation were not implemented, then the increased time spent in a high radiation environment would be expected to increase exposures. However, if the higher activity waste streams were disposed segregated from the low activity streams (most of the compressible wastes are trash and other low activity streams), then the radiation environment

while stacking the lower activity wastes would probably be lower. The resulting exposures would also be lower.

As expected, operation of the hot waste facility (to dispose of the L-NFRCOMP stream) results in a somewhat increased volume of waste delivered to the disposal facility and total operational exposures would be somewhat higher than for Case 4D. However, total occupational exposures would be lower than if the wastes were disposed with the remainder of the waste streams.

Disposal costs illustrate the fact that increased costs for improved facility design and operations would be expected to reduce long-term care costs. Compared with Case 1-3 ($188 million), Cases 4A through 4D illustrate increasing costs as additional work is performed onsite. Additional costs for segregation (Case 4A) are associated with the assumed construction of a waste storage area, aquisition of an additional onsite transport vehicle and hiring of additional personnel. For Case 4B, additional costs involve aquisition and use of a vibratory compactor. Addition of an improved cover (Case 4C) is estimated to be reasonably expensive (an additional $9 million over 20 years). This was calculated from the assumption that a high grade of clayey soil had to be transported to the disposal facility from several miles distance. Of course, if such soil were available nearer to the facility (e.g., an onsite borrow area), the costs would be considerably reduced. Similarly, additional costs are associated with waste stacking (Case 4D). As can be seen, operation of a hot waste facility would be expensive--i.e., an additional $3 million to dispose of only 800 m^3 of waste.

Long-term care costs are difficult to estimate and have not been broken out in as detailed a manner as the costs associated with operational variables. It is difficult to precisely judge or to exactly quantify how much a given facility design and operation alternative would be expected to reduce long-term care costs. For this EIS, long-term care costs have been broken out into three levels: high, moderate, and low. Cases 4A through 4E have been judged to involve a range of costs from moderate to high--i.e., from $18.1 million to $38.2 million.

Case 4A is estimated to involve long-term care costs toward the higher end of the range, but would nonetheless be expected to be less than those for Case 1. This is because 75% of the waste disposed at the facility (7.47E+5 m^3) is in an unstable form, and segregation of unstable waste streams from stable waste streams would reduce overall long-term maintenance requirements. Instead of all disposal trenches undergoing severe subsidence, only about 75% would experience such subsidence. Cases 4D and 4E are estimated to involve long-term costs toward the lower end of the range. (The addition of a hot waste facility for small volumes of waste would be expected to have little to no effect on long-term care costs.) Cases 4B and 4C would involve long-term care costs between the two ends of the range.

Total costs (design and operational costs plus long-term care costs) are also shown in Table 5.10, along with unit costs (total costs divided by the total volume of waste disposed). These are also presented as a range in costs.

The remaining impact measures are total land use and energy use, where the energy value listed is the incremental sum of the total gallons of fuel for waste

transport and disposal as well as for long-term care. For Cases 4A and 4B the total incremental energy use over 20 years is calculated to be 300,000 gallons. (Case 4B would actually be expected to involve slightly higher energy consumption than Case 4A, but the difference is too small to be illustrated.) For illustration purposes, incremental energy use for Cases 4A and 4B was calculated under an assumption of a high level of long-term care while incremental energy use for Cases 4C through 4E was calculated under an assumption of a moderate level of long-term care. As shown in Case 4C, although an additional operational step is involved (the thicker cap), the assumption of a moderate level of long-term care reduces the overall energy use to levels about the same as those for Case 1. In Case 4D and 4E, the waste containers are assumed to be stacked, which is an additional process step resulting in additional energy use. However, this is counteracted by the increase in disposal efficency, resulting in a decrease in land committed for waste disposal. Fewer disposal cells need to be constructed, backfilled, covered, compacted, and maintained. In addition, for Case 4D, less waste (by 800 m^3) is delivered to the disposal facility. Delivery of this waste to the facility and disposing of it in a hot waste facility (Case 4E) results in an increase in energy use over Case 4D.

The land use is 340,000 m^2 for Cases 4A-4C, and drops to 227,000 m^2 for Cases 4D and 4E. The reduction in land use is due to the assumption of waste stacking for the latter two cases. The disposal efficiency is assumed to be raised from 0.5 to 0.75. This may be difficult to achieve, however, in actual practice. Even if the waste is stacked, operational limitations may not reduce the interstitial void space between waste packages by very much.

5.2.4.3 Case 5 - Concrete Walled Trenches

This case is included to help assess the costs and radiological impacts of a potential disposal option in which site stability is achieved by engineering means. This case is summarized on Table 5.11. Appendix F investigates a number of methods by which subsidence and percolation of water into disposal cells may be reduced through engineering means. Other possible methods are investigated in Reference 5. These include such methods as grouting the disposed waste mass or placing the waste into engineered structures such as caissons or walled trenches. There may also be a number of other disposal designs which may be used.

Use of engineered methods at the disposal facility to achieve waste stability may, depending upon the particular disposal method utilized and the disposal site environment, involve a range of potential costs and radiological and other impacts. A rather "extreme" (expensive) method is illustrated in this example.

In this case, all wastes are assumed to be stacked into concrete walled trenches. In addition, unstable wastes and waste streams containing organic chemicals or complexing agents are disposed in segregated disposal cells. The spaces between the waste packages are grouted and a one-meter thick cap of concrete is poured over the waste, over which two meters of compacted clayey soil is emplaced and compacted. Grass is then planted.

Table 5.11 Summary of Cases 5 and 6

Case 5 - Cement Walled Trench

- Cement walled trench
- Waste spectrum 1
- Use of thicker, compacted clay cap
- Segregation of wastes containing chelates
- Segregation of compressible wastes
- Stacked disposal of waste
- Grouting emplaced between waste packages
- Cement walled trench used as an intruder barrier

Case 6 - Decontainerized Disposal of Compressible Wastes

- Regular SLB trench
- Waste spectrum 1
- Use of a thicker, compacted cap
- Segregation of wastes containing chelates
- Segregation of compressible wastes
- Random disposal except for low activity compressible wastes
- Decontainerized disposal of dry, low activity compressible wastes
- Use of a sand backfill
- Layering used as an intruder barrier

Ground-Water Impacts

Projected ground-water impacts are summarized in Table 5.12. As can be seen, all calculated exposures are lower than those estimated for the previous cases. The estimated organ doses, with the exception of thyroid and bone, are on the order of 10^{-3} mrem/yr at the site boundary well, are about 5 times higher at the intruder well, and drop by approximate orders of magnitude at both the population well and the surface water access location. The reason that boundary well whole body (and other organs) exposures are higher than those for the intruder well is that most of these exposures are still due to tritium, which is indicated by the observation that the maximum exposures occur at about 100 years following facility closure. (The actual maximum potential intruder well exposures are estimated to be about 1.3E-2 mrem, but occur prior (50 years) to the end of the active institutional control period.) For thyroid, there is less of a change. Exposures at the intruder and boundary wells are about 0.4 mrem/yr and those at the population well about 0.1 mrem/yr, while the surface water access is about an order of magnitude less. The reason that considerably less reduction in thyroid exposure is observed than for exposures to other organs is due to the assumption of a general deterioration in the disposal cells at the end of the active institutional control period. At a

Table 5.12 Estimated Radiological Ground-Water Impacts for Cases 5 and 6.

	(mrem/yr)						
Cases	Body	Bone	Liver	Thyroid	Kidney	Lung	GI
(5)							
Intruder Well	8.096E-4 (100)	1.434E-3 (6,000)	8.096E-4 (100)	3.873E-1 (4,000)	8.096E-4 (100)	8.096E-4 (100)	8.096E-4 (100)
Boundary Well	4.179E-3 (70)	1.429E-3 (6,000)	4.179E-3 (70)	3.873E-1 (4,000)	4.179E-3 (70)	4.179E-3 (70)	4.179E-3 (70)
Population Well	2.229E-4 (10,000)	3.314E-4 (10,000)	1.163E-4 (10,000)	1.224E-1 (6,000)	1.976E-4 (10,000)	6.667E-5 (10,000)	1.491E-4 (10,000)
Surface Water	9.851E-6 (10,000)	1.363E-5 (10,000)	4.992E-6 (10,000)	5.577E-3 (10,000)	8.681E-6 (10,000)	2.732E-6 (10,000)	6.448E-6 (10,000)
(6)							
Intruder Well	2.487E-2 (6,000)	4.517E-2 (6,000)	2.156E-2 (100)	1.238E+1 (4,000)	2.235E-2 (6,000)	2.156E-2 (100)	2.156E-2 (100)
Boundary Well	1.113E-1 (70)	4.503E-2 (6,000)	1.113E-1 (70)	1.238E+1 (4,000)	1.113E-1 (70)	1.113E-1 (70)	1.113E-1 (70)
Population Well	7.096E-3 (10,000)	1.045E-2 (10,000)	3.690E-3 (10,000)	3.911E+0 (6,000)	6.287E-3 (10,000)	2.103E-3 (10,000)	4.739E-3 (10,000)
Surface Water	3.147E-4 (10,000)	4.347E-4 (10,000)	1.594E-4 (10,000)	1.783E-1 (10,000)	2.773E-4 (10,000)	8.713E-5 (10,000)	2.060E-4 (10,000)

time period equal to 100 years following license termination, approximately 10 percent of the disposal cells are assumed to be significantly disturbed by intrusion so that infiltration of rainwater into the disturbed disposal cells is increased from less than a millimeter per year to about 30 mm/year. The percolation over the remainder of the disposal area is raised to about 1.5 mm/yr. Since most of the boundary well exposures are due to migration of tritium, the hundred year time period of minimum infiltration allows considerable decay of the tritium inventory (by a factor of about 280) prior to initiation of the higher percolation rates. Since iodine-129 is so very long lived, the 100-year institutional control period has virtually no effect on the inventory in the disposal cells.

Other Impacts

Other impacts are listed in Table 5.13. It can be seen that the major differences from Cases 4A-4E are in occupational exposures at the disposal facility, costs, incremental energy use, and committed land.

Table 5.13 Other Impacts Associated with Cases 5 and 6

Impacts	Case 5	Case 6
Short-term population exposures: (man-mrem)		
Processing at waste generator	-	-
Processing at regional processing center	0	0
Waste transportation	5.10E+5	5.10E+5
Short-term occupational exposures: (man/mrem)		
Processing at waste generator	-	-
Processing at regional processing center	0	0
Waste transportation	5.82E+6	5.82E+6
Waste disposal	5.27E+6	1.05E+7
Waste generation and transport costs: ($)		
Processing at waste generator	-	-
Processing at regional processing center	0	0
Waste transportation	2.05E+8	2.05E+8
Disposal Costs: ($)		
Design and Operational	4.21E+8	2.56E+8
Postoperational	1.22E+7	1.81E+7
Total:	4.33E+8	2.74E+8
Unit ($/m^3)	442	280
Energy use: (gal)	+3.00E+5	-1.00E+5
Land use: (m^2)	5.33E+5	3.40E+5
Waste volume disposed: (m^3)		
Regular:		
Chemical-stable	1.02E+4	1.02E+4
Chemical-unstable	1.17E+5	1.15E+5
No chemical-stable	2.23E+5	2.23E+5
No chemical-unstable	6.30E+5	5.34E+5
Total	9.80E+5	8.82E+5
Layered:		
Chemical-stable	0	0
Chemical-unstable	0	1.87E+3
No chemical-stable	0	0
No chemical-unstable	0	9.59E+4
Total	0	9.77E+4
Hot Waste Facility	0	0
Total disposed:	9.80E+5	9.80E+5
Total volume not acceptable: (m^3)	1.94E+4	1.94E+4

Occupational exposures are seen to be in the range of 5.27 E+6 man-millirem, which is similar to the range of exposures calculated for Cases 4D and 4E, in which the waste is assumed to be stacked into the disposal cells. Waste is also assumed to be stacked for Case 5. These occupational exposures are more than twice those estimated for Case 1. Waste operations would all take place from the top of the disposal cells, and so the average distance between the workers and the disposed waste would be increased. On the other hand, waste disposal operations would take longer. In addition, use of walled trenches involves grouting of waste packages, which is an additional disposal step.

The most significant difference from earlier cases appears to be in the costs. Due to the expensive engineered disposal cells, facility design and operational costs for Case 4A are projected to climb to $421 million ($430/m^3, $12.20/ft^3), which is an increase by a factor of 2.25 from Case 1 and by about 2 from Case 4C. This may actually be a low estimate. Since this disposal technique has not been implemented on a full-scale basis at any disposal facilities, there would undoubtably be a number of logistical and practical details to work out. These could raise costs well above those estimated here. One of the practical difficulties, for example, would involve emplacement of all wastes from above the disposal cells using slings and hoists. This would be a straightforward task for liners and boxes, but would be considerably more difficult for drummed wastes. This is especially significant when one considers that the great majority of the LLW delivered to disposal facilities are delivered in 55-gallon drums.

On the other hand, the site stability resulting from the extensive engineering practices represented by use of the walled trench results in a considerable reduction in estimated long-term care costs. Long-term care costs are estimated at the lowest level ($12.2 million). Overall costs for Case 5 are estimated at $433 million, or an average of about $442 per m^3 of waste ($12.50/ft^3). As discussed above, these costs may actually be higher.

Another concern is equitability. Much of the waste is very low hazard material and often only suspected of being contaminated with radioactivity. This waste is quite often generated by small businesses or other concerns such as clinics, colleges, research facilities, and small manufacturers. In addition, a particular licensee may generate only small quantities of waste material per year. These factors increase the difficulty of the analysis and arriving at an equitable solution. On one hand, it is difficult to justify requiring disposal methods involving significantly increased costs to dispose of waste which may otherwise be of very low hazard. Such significantly increased costs would probably principally impact licensees such as small businesses or other concerns which may also only generate relatively small volumes of waste per licensee. On the other hand, disposal facility instability has been shown to a significant factor in long-term costs to a site owner.

Energy use is estimated to increase relative to Case 1--in this case by 200,000 gallons of equivalent fuel. In this calculation, the reduced energy use associated with long-term care is somewhat offset by the increased energy consumption associated with construction of the walled trenches. Due to greatly decreased efficiency of the walled trenches, land use is estimated to be approximately 1.57 times that for Case 1 and 2.35 times that for Case 4D.

5.2.4.4 Case 6 - Decontainerized Disposal of Compressible Waste

Case 6 is included to assess a potential alternative method of disposing of low activity compressible wastes. In this case, lower activity compressible wastes are assumed to be emptied out of containers into segregated disposal trenches, where the waste is periodically covered by a soil layer. Trenches for which this practice occurred would be operated in a similar manner as a sanitary landfill. Operations would be carried out under weather shielding (such as an air support building) to reduce wind scatter. This case is summarized on Table 5.11.

The rationale for considering this case is that with no rigid containers, there would be an overall reduction in void spaces within the disposal trenches containing the compressible wastes. There would be some initial slumping as the waste degrades, but after a few years, it could be assumed that an equilibrium condition could occur. Long-term maintenance requirements, relative to Case 1, would be reduced. This technique, however, has never been extensively used at a radioactive waste disposal facility.

Ground-Water Impacts

Maximum estimated ground-water radiological impacts for this case are summarized in Table 5.12, while other impacts are summarized in Table 5.13. Relative to Case 4C, ground-water impacts are seen to be the same at the four biota access locations. Maximum organ doses, except for thyroid, at the boundary well are in the range of 0.1 mrem, with exposures at the population well and the surface water access location in the range of 10^{-3} mrem, and 10^{-4} mrem, respectively. Thyroid exposures are considerably higher than the other organ doses at all access locations. As discussed previously, the maximum exposures at the intruder and boundary wells are mostly due to tritium and iodine.

Other Impacts

Also of interest are the other impacts shown in Table 5.13. Of concern is the greatly increased occupational exposures received during waste handling and disposal operations at the disposal facility. These are estimated to be approximately 4 times those for Case 1 and twice those for Case 4D. These exposures are uncertain, since this disposal technique has never previously been extensively used at any disposal facility, and could be higher.

Disposal facility design and operational costs are lower than those for Case 5, but are significantly higher than Cases 1 through 4E. Long-term care costs are especially difficult to estimate. The idea behind this disposal technique is that the reduction in void space and the increased rate of decomposition would result in decreased long-term maintenance requirements. However, given the somewhat speculative nature of this disposal technique, a moderate (rather than low) level of long-term care costs has been assumed. This results in a total disposal cost of \$274 million, or \$280/m^3 (\$7.93/ft^3). This is less than the unit costs for Case 5, but greater than unit costs for Cases 1 through 4E.

Due to the reduced long-term care requirements, incremental energy use is reduced relative to Case 1 by about 100,000 gallons of equivalent fuel. Land use is similar to Cases 1 through 4C.

5.2.4.5 Case 7 - Use of Improved Waste Forms

Case 7 presents a significant change relative to the previous cases in that waste spectrum 2 is assumed rather than waste spectrum 1. In waste spectrum 2 the following is assumed:

- All LWR concentrated liquids are evaporated to 50 weight percent solids.

- All LWR process wastes, including liquids, ion exchange resins, filter media, and cartridge filters are solidified using improved solidification techniques (solidification scenario B). In this case, half the waste is assumed to be solidified in cement and the other half is assumed to be solidified in an improved polymer solidification agent.

- Liquid waste streams from production of medical isotopes are assumed to be solidified in an improved polymer solidification agent (solidification scenario C).

- All combustible waste streams are assumed to be compacted. All fuel cycle trash streams and half of the institutional and industrial waste streams are assumed to be compacted by the waste generator. The other half of the institutional and industrial combustible waste streams (I+COTRASH, N+SSTRASH, N+LOTRASH) are assumed to be compacted at a regional processing facility which is assumed to be colocated with the disposal facility. This results in a total volume of 1.025 E+5 m^3 of compressible material which is processed at the regional processing center to an approximate volume of 2.98 E+4 m^3 prior to disposal.

- All higher activity waste streams are stabilized in a manner which is less likely to degrade and reduce in volume in a humid environment. These include the following waste streams: P-NCTRASH, B-NCTRASH, L-NFRCOMP, N-ISOPROD, AND N-HIGHACT. These waste streams are not in themselves unstable but are assumed to be packaged in waste spectrum 1 using compressible trash for shielding and/or containing large void spaces within the waste packages. There may be a number of ways in which these waste streams may be stabilized--e.g., for activated metals such as nonfuel reactor core components (L-NFRCOMP), void spaces within a waste package may be potentially filled with a nondegradable filter such as sand rather than compressible trash. The costs for such waste stabilization may vary depending upon the waste form and activity, but as an upper bound the costs of placing the waste streams into high integrity containers may be used. As discussed in Section 5.2.4.8, these costs are estimated as approximately $450 per m^3 of waste.

In a number of ways waste spectrum 2 represents the direction in waste form and packaging toward which waste generators are heading. For examples, although there are no regional processing facilities currently operating, many licensees (particularly large licensees) have installed or are installing waste compacting equipment. In addition, license conditions at operating waste disposal facilities will shortly require that LWR ion exchange resins and filter media be either solidified or packaged in a high integrity container.

Due to the additional waste processing carried out by the waste generators and at the regional processing center, the total volume of waste is reduced in waste spectrum 2 from one million m^3 to 6.978E+5 m^3. In addition, the volume of unstable waste streams is reduced from 76% to 45% of the total waste spectrum. The activity in this waste spectrum, however, is assumed to remain the same.

Case 7 consists of 4 subcases in which successive disposal facility design and operational improvements are made. These 4 subcases are summarized briefly below and in more detail in Table 5.14:

- Case 7A. Similarly to Case 1A, waste streams are randomly disposed into disposal cells with no segregation of compressible waste streams or waste streams containing organic chemicals or chelating agents. A thin soil cover ("standard cap") is placed over the disposed waste and little compaction of the trench cover takes place.

- Case 7B. This case is similar to Case 4A in that easily compressible waste streams as well as waste streams containing significant quantities of chelating agents are assumed to be disposed in a segregated manner.

- Case 7C. This case is similar to Case 4B. In addition to segregation of the compressible waste streams and waste streams containing chelating agents, the disposal cell covers containing compressible waste streams are subjected to improved compaction techniques.

- Case 7D. This case is similar to Case 4C. In addition to waste segregation, thicker disposal cell covers composed of a high-grade clay soil are assumed to be emplaced over all the disposal cells, which are also subjected to improved compaction techniques.

Ground-Water Impacts

Maximum ground-water impacts at each of the four biota access locations are listed in Table 5.15. In general, the impacts calculated in Case 7A for the intruder and boundary wells are, except for thyroid exposures, similar to those calculated for Case 1A. Similarly, boundary well impacts for Cases 7B through 7D are, except for thyroid exposures, similar to those respectively calculated for Cases 4A through 4C. However, a more significant difference is observed for thyroid exposures at the intruder and boundary wells, as well as exposures to all organs at the population well and the surface water access location.

Table 5.14 Summary of Cases 7A-7D

Case 7A - Improved Waste Forms: No Segregation

- Regular SLB trench
- Waste spectrum 2
- SLB with a standard cap
- No segregation of wastes containing chelates
- No segregation of compressible wastes
- Random disposal of waste with a sand backfill
- Layering used as an intruder barrier

Case 7B - Improved Waste Forms: Segregation

- Regular SLB trench
- Waste spectrum 2
- SLB with a standard cap
- Segregation of wastes containing chelates
- Segregation of compressible wastes
- Random disposal of waste with a sand backfill
- Layering used as an intruder barrier.

Case 7C - Improved Waste Forms: Segregation Plus Compaction

- Regular SLB trench
- Waste spectrum 2
- SLB with a standard cap
- Compaction using improved methods
- Segregation of wastes containing chelates
- Segregation of compressible wastes
- Random disposal of waste with a sand backfill
- Layering used as an intruder barrier

Case 7D - Improved Waste Forms: Segregation, Compaction and Improved Covers

- Regular SLB trench
- Waste spectrum 2
- SLB with a thicker clay cap
- Compaction using improved methods
- Segregation of wastes containing chelates
- Segregation of compressible wastes
- Random disposal of waste with a sand backfill
- Layering used as an intruder barrier

Table 5.15 Estimated Radiological Impacts from Ground-Water Migration for Cases 7A through 7D

	(mrem/yr)						
Cases	Body	Bone	Liver	Thyroid	Kidney	Lung	GI
(7A)							
Intruder	3.042E+0	2.466E-1	3.042E+0	2.353E+1	3.042E+0	3.042E+0	3.042E+0
Well	(100)	(6,000)	(100)	(6,000)	(100)	(100)	(100)
Boundary	1.570E+1	2.464E-1	1.570E+1	2.353E+1	1.570E+1	1.570E+1	1.570E+1
Well	(70)	(6,000)	(70)	(6,000)	(70)	(70)	(70)
Population	2.044E-2	5.468E-2	1.397E-2	7.430E+0	1.889E-2	1.096E-2	1.594E-2
Well	(10,000)	(10,000)	(10,000)	(8,000)	(10,000)	(10,000)	(10,000)
Surface	9.174E-4	2.425E-3	6.226E-4	3.387E-1	8.460E-4	4.855E-4	7.017E-4
Water	(10,000)	(10,000)	(10,000)	(10,000)	(10,000)	(10,000)	(10,000)
(7B)							
Intruder	7.702E-1	2.158E-1	7.702E-1	2.500E+0	7.702E-1	7.702E-1	7.702E-1
Well	(100)	(6,000)	(100)	(6,000)	(100)	(100)	(100)
Boundary	3.976E+0	2.156E-1	3.976E+0	3.976E+0	3.976E+0	3.976E+0	3.976E+0
Well	(70)	(6,000)	(70)	(70)	(70)	(70)	(70)
Population	1.035E-2	4.680E-2	9.678E-3	7.858E+0	1.020E-2	9.362E-3	9.895E-3
Well	(10,000)	(10,000)	(10,000)	(8,000)	(10,000)	(10,000)	(10,000)
Surface	4.598E-4	2.072E-3	4.290E-4	3.5E81-2	4.525E-4	4.146E-4	4.386E-4
Water	(10,000)	(10,000)	(10,000)	(8,000)	(10,000	(10,000)	(10,000)
(7C)							
Intruder	7.645E-1	1.238E-1	7.645E-1	2.246E+0	7.645E-1	7.645E-1	7.645E-1
Well	(100)	(6,000)	(100)	(6,000)	(100)	(100)	(100)
Boundary	3.947E+0	1.237E-1	3.947E+0	2.246E+0	3.947E+0	3.947E+0	3.947E+0
Well	(70)	(6,000)	(70)	(6,000)	(70)	(70)	(70)
Population	6.279E-3	2.690E-2	5.668E-3	7.073E-1	6.139E-3	5.383E-3	5.868E-2
Well	(10,000)	(10,000)	(10,000)	(10,000)	(10,000)	(10,000)	(10,000)
Surface	2.792E-4	1.191E-3	2.514E-4	3.224E-2	2.727E-4	2.384E-4	2.602E-4
Water	(10,000)	(10,000)	(10,000)	(10,000)	(10,000)	(10,000)	(10,000)
(7D)							
Intruder	2.151E-2	3.352E-2	2.151E-2	5.277E-1	2.151E-2	2.151E-2	2.151E-2
Well	(100)	(6,000)	(100)	(6,000)	(100)	(100)	(100)
Boundary	1.111E-1	3.339E-2	1.111E-1	5.277E-1	1.111E-1	1.111E-1	1.111E-1
Well	(70)	(6,000)	(70)	(6,000)	(70)	(70)	(70)
Population	1.661E-3	7.249E-3	1.517E-3	1.661E-1	1.627E-3	1.450E-3	1.564E-3
Well	(10,000)	(10,000)	(10,000)	(10,000)	(10,000)	(10,000)	(10,000)
Surface	6.848E-5	2.943E-4	6.194E-5	7.563E-3	6.695E-5	5.889E-5	6.402E-5
Water	(10,000)	(10,000)	(10,000)	(10,000)	(10,000)	(10,000)	(10,000)

This pattern is basically due to the fact that under waste spectrum 2, while no change in waste form is assumed for the two low volume waste streams delivered to the facility containing very high concentrations of tritium (N-TRITIUM and N-TARGETS), all LWR process waste streams are placed into a stable waste form through solidification. In addition, a number of higher activity waste streams are packaged to achieve greater waste form stability over the long term.

For Case 7A, even though there is an overall improvement in waste form in waste spectrum 2, the disposal practice of mixing compressible waste streams with stable waste streams still results in trench subsidence problems and increased percolation into all of the disposal cells. This increased percolation is conservatively assumed to be the same as that for Case 1, although the additional compaction applied to compressible waste streams would actually be expected to reduce the rate of subsidence and thus reduce percolation. This effect is difficult to quantify but would be expected to be most significant over the short term. At any rate, tritium releases from the N-TRITIUM and N-TARGETS waste streams are essentially identical to those experienced in Case 1A, and almost identical whole body exposures at the boundary well result. After this pulse of tritium passes, however, the next highest calculated whole body exposures at the boundary well are about 0.8 mrem for Case 7A, while the next highest whole body boundary well exposures for Case 1A are about twice as high. Both of these maximums occur at about 6,000 years following license termination.

The reduced secondary maximums in Case 7A (relative to Case 1A) is principally due to the assumed use of less leachable waste forms for LWR process streams. This effect may be observed, for example, by comparing population well and surface water exposures in Cases 7A through 7D with the respective Cases 1A and 4A through 4C. This effect is most easily observed, however, by comparing thyroid exposures at all of the access locations. Comparing Cases 7A through 7D with Cases 1A and 4A through 4C, thyroid exposures are reduced by a factor of about 4 at the population well and the surface water access location. This is expected given the assumed reduction in leaching achieved from solidification of the LWR process waste streams.

Other Impacts

Other impacts are set out in Table 5.16. In it can be seen that potential population exposures from waste processing are still taken to be at negligible levels. This is because essentially all of the waste processing is done through compaction techniques, and potential airborne effluents from compaction are taken to be negligible compared to those potential exposures from incineration. Population exposures from waste transportation are slightly reduced--i.e., from 5.10 E+5 man-millirem to about 5.01 E+5 man-millirem over 20 years--which is a result of the reduced volume of waste that is delivered to the reference facility under waste spectrum 2.

Occupational exposures are all expected to increase with respect to Case 1. For example, total exposures for waste processors are estimated to rise by

Table 5.16 Other Impacts for Cases 7A Through 7D

Impacts	Case 7A	Case 7B	Case 7C	Case 7D
Short-term population exposures: (man-mrem)				
Processing at waste generator	-	-	-	-
Processing at regional processing center	0	0	0	0
Waste transportation	5.01E+5	5.01E+5	5.01E+5	5.01E+5
Short-term occupational exposures: (man-mrem)				
Processing at waste generator	+1.68E+6	+1.68E+6	+1.68E+6	+1.68E+6
Processing at regional processing center	1.25E+5	1.25E+5	1.25E+5	1.25E+5
Waste transportation	5.43E+6	5.43E+6	5.43E+6	5.43E+6
Waste disposal	2.34E+6	2.34E+6	2.34E+6	2.34E+6
Waste generation and transport costs: ($)				
Processing at waste generator	+3.38E+8	+3.38E+8	+3.38E+8	+3.38E+8
Processing at regional processing center	3.63E+7	3.63E+7	3.63E+7	3.63E+7
Waste transportation	1.85E+8	1.85E+8	1.85E+8	1.85E+8
Disposal Costs: ($)				
Design and operational	1.93E+8	1.92E+8	1.93E+8	1.99E+8
Long-term care	3.82E+7	1.81-3.82E+7	1.81E+7	1.22E-1.81E+7
Total:	2.31E+8	2.10-2.30E+8	2.11E+8	2.11-2.17E+8
Unit ($/m^3) (a)	341	310-340	311	311-320
Energy Use: (gal)	+8.00E+6	+8.00+6	+7.80E+6	+7.80E+6
Land Use: (m^2)	2.36E+5	2.36E+5	2.36E+5	2.36E+5
Waste volume disposed: (m^3)				
Regular:				
Chemical-stable	3.90E+4	4.00E+4	4.00E+4	4.00E+4
Chemical-unstable	7.40E+4	7.40E+4	7.40E+4	7.40E+4
No chemical-stable	1.32E+5	3.30E+5	3.30E+5	3.30E+5
No chemical-unstable	2.32E+5	2.32E+5	2.32E+5	2.32E+5

Table 5.16 (Continued)

Impacts	Case 7A	Case 7B	Case 7C	Case 7D
Layered:				
Chemical-stable	3.83E+3	2.87 E+3	2.87 E+3	2.87 E+3
Chemical-unstable	0	0	0	0
No chemical-stable	1.98E+5	0	0	0
No chemical-unstable	0	0	0	0
Total	2.02E+5	2.87E+3	2.87E+3	2.87E+3
Hot waste facility:	0	0	0	0
Total disposed:	6.78E+5	6.78E+5	6.78E+5	6.78E+5
Total volume not acceptable: (m^3)	1.94E+4	1.94E+4	1.94E+4	1.94E+4

*The indicated unit costs are obtained from dividing the total disposal costs by the volume of waste delivered to the disposal facility, which is about 680,000 m^3 for Case 7. If unit disposal costs were calculated using the "unprocessed" (waste spectrum 1) volumes disposed for Cases 1 through 6, unit costs would be as follows:

7A	7B	7C	7D
236	214-235	215	215-221

2.23E+6 man-millirem. Waste processing exposures at the regional processing center are calculated at 1.25E+5 man-millirem, which translates to 8.4 man-rem per year. Assuming two shifts, each composed of a two-man crew, this translates into an annual exposure of about 1.6 rems per man.

Waste transportation occupational exposures and waste disposal facility occupational exposures are generally reduced from the exposures set out in the previous Cases 1 through 6. The volume reduction tends to increase the concentration of the radionuclides in the resulting waste streams. However, the concentration of radionuclides is already so low in the compacted streams that the increased concentration is more than off-set by the reduced number of waste packages that must be handled.

Similarly, total population exposures from waste transportation are reduced with respect to Cases 1 through 6. This is again because of the reduced number of waste shipments for transfer of the same activity of waste to the disposal facility.

Of interest in this case is the relationship between processing costs, transportation costs, and disposal costs. As discussed by Tekenkron, (Ref. 6) the actual costs are quite variable and are a complicated function of disposal charges at the facility, transportation distances, the potential need to use shielded transport vehicles, the volume of waste processed, the costs of installing and maintaining waste processing equipment, and so forth. Additional expenditures would be, of course, required by a waste generator to install, use, and maintain compaction equipment. However, less storage space would be required by the waste generator, fewer shipping containers would be needed, and overall transportation costs would be expected to be reduced. This is borne out by Table 5.16. For the same activity in the waste spectrum, overall transportation costs over 20 years are estimated to be reduced by a factor of 1.13 over waste spectrum 1--e.g., from $205 million to $185 million.

For waste spectrum 2, total processing costs over 20 years are raised relative to waste spectrum 1 by $374.3 million. Of this additional $374.3 million, $36.3 million results from charges for processing by compaction of 1.025 E+5 m^3 of waste at the regional processing center. The compaction results in a total volume reduction of about 3.4 at an average cost of $354 per meter of unprocessed waste ($10.03/$ft^3$). Of the remaining additional $338 million expended by waste generators, approximately $40 million is due to processing 7 waste streams by compaction at the facilities at which the waste is generated. (These include the P-COTRASH, B-COTRASH, F-COTRASH, I-COTRASH, N-SSTRASH, N-LOTRASH, and I-LQSCNVL streams; which are reduced in total disposed volume relative to waste spectrum 1 from 3.8 E+5 m^3 to 2.2 E+5 m^3.) Of the remainder, approximately $257 million is expended in solidifying previously unstable LWR process waste streams, while approximately $41 million is conservatively assumed to be expended in stabilizing the higher activity waste streams.

Some care is required in interpreting these incremental waste processing costs. For example, costs for compaction of compressible wastes are already being borne by many licensees, generally as a means of reducing waste transport costs. The remaining expense is involved with stabilizing the higher activity waste streams. Much of the additional costs for waste stabilization involve costs for solidifying LWR ion exchange resins and filter media. Solidifying these waste streams is one way in which existing disposal license conditions may be met.

Some care is also required in interpreting the calculated disposal costs. As shown in Table 5.16, facility design and operation costs increase from $193 million to $199 million for Case 7A through 7D, reflecting the successive addition of facility design and operating options. Design and operating costs are reduced, however, for Cases 7A-7D compared with respective Cases 1A, 4A, 4B, and 4C. This is due to the reduced volume of waste delivered to the disposal facility.

Long-term care costs are difficult to estimate for Cases 7A through 7D, but would in general be considered to involve a reduced level of long-term care costs than those for the respective Cases 1A, 4A, 4B, and 4C. In Case 7A, for example, despite the additional processing costs and occupational exposures

borne by waste generators in waste spectrum 2, the stable waste streams are still randomly mixed with unstable waste streams in the disposal cells. The potential for subsidence problems involving all waste disposal cells requires an assumption of a high level of long-term care costs. This assumption, however, is more conservative than the similar assumption for Cases 1-3 and 1A. The improved waste form provided by the compaction would resist degradation better than noncompacted waste. Potential voids would be slower to form and potential slumping problems reduced. If subsidence does occur, it would occur at a lower rate. This would reduce the labor required to maintain the facility and also reduce the percolation of water into the disposal cells containing compressible material, thus reducing potential ground-water migration from these disposal cells.

Long-term care costs for Cases 7B through 7D are estimated to be further reduced depending upon facility design and operating practices. In Case 7D, for example, a low to moderate range of long-term care costs is estimated. This can be compared with Case 4C, in which something greater than a moderate level of long-term care costs are estimated. In Case 4A, 76 percent of the disposed waste volume is in an unstable form while for Case 7D, this has been reduced to 45%. In addition, for Case 7D, waste streams having high concentrations of radionuclides have been stabilized to resist extreme volume change due to waste or waste package degradation. The inventory of radionuclides in the disposal cells containing unstable wastes has been considerably reduced, therefore reducing the potential migration impacts from these waste streams. This should lessen the concern over maintenance of these segregated trenches and help to reduce long-term costs.

Total disposal costs range from about $210 million to about $231 million over the 4 subcases. It is interesting to observe that the difference in the total costs over the 4 cases ($21 million) is much greater than the difference in design and operating costs. This is because the increase in design and operating costs is compensated by the reduction in long-term care costs.

As shown and as compared with Cases 1A and 4A through 4C, total costs have decreased, since the total waste volume delivered to the disposal facility has decreased, while unit costs have increased. This makes estimation of unit costs difficult as well as use of unit costs to compare alternatives. On one hand, the disposal facility would not fill up with waste as fast and so would be able to accept additional waste for disposal. However, the disposal facility may be restricted to accepting waste only from a particular region or group of states, in which case the operating life of the disposal facility would be extended. In addition, the lower volume of waste being accepted means less revenues received by the disposal facility operator. Capital and other overhead costs are not linearly dependent upon the volume of waste received, since many of the same activities would have to be performed at a disposal facility accepting a large volume of waste as one accepting a small volume of waste. Disposal facility operators would therefore tend to raise their prices to cover expenses.

At any rate, Table 5.16 illustrates two unit cost figures. One is calculated by dividing the total disposal costs by the volume of waste actually delivered to the disposal facility, which is about 680,000 m^3 for Case 7. The other unit cost is calculated by dividing the total disposal costs by the "unprocessed" (waste spectrum 1) volumes delivered to the disposal facility for Cases 1 through 6. From this, it would appear that use of total (20 year) disposal costs is a better unit to compare alternatives than unit costs.

Committed land use for the 4 subcases of Case 7 is 236,000 m^2. This is a significant drop from Cases 1 through 6 (e.g., 340,000 m^2 for most of the earlier cases) and reflects the lower volume of waste delivered to the disposal facility under waste spectrum 2.

Incremental energy use varies over a fairly narrow range, and reflects the opposing mechanisms of increased energy consumption for additional facility design and operation options and decreased energy consumption due to lower long-term maintenance requirements. In addition, increased energy consumption is associated with waste processing, while decreased energy consumption is associated with waste transportation and waste disposal operations. In general, however, and due to the additional waste processing, incremental energy consumption for Cases 7A through 7D are higher than the respective Cases 1A and 4A through 4C.

5.2.4.6 Case 8 - Use of Further Improved Waste Forms

This case is similar to Case 7D except that waste spectrum 3 is used instead of waste spectrum 2. Under waste spectrum 3, LWR process wastes are assumed to be solidified using further improved solidification agents (solidification scenario C), which is represented by a synthetic polymer having low leaching characteristics. LWR concentrated liquids are first evaporated to 50 weight percent solids. Extensive incineration of combustible material (except LWR process wastes) is performed. In this scenario, fuel cycle trash, LWR decontamination resins (L-DECONRS stream), trash from large institutions, and trash from large industrial firms are assumed to be incinerated at the point of generation. Trash streams from small institutional and industrial facilities (which include the I+COTRASH, N+SSTRASH, AND N+COTRASH waste streams) are assumed to be delivered to a regional processing center for incineration. This regional processing center is assumed to be colocated with the disposal facility. After waste incineration, the ashes are assumed to be solidified prior to disposal using a synthetic polymer (solidification scenario C).

Processing the waste in this manner results in a significant reduction in the amount of waste delivered to the disposal facility that is in an unstable form. That is, only the I+LQSCNVL, I+BIOWAST, N-LOWASTE, AND F-NCTRASH streams still exist in an unstable form, which only totals 2.079 E+4 m out of the 4.92 E+5 m^3 eventually disposed at the disposal facility (representing only 4% of the disposed volume). The design of the disposal facility is assumed to be similar to that for Case 7D, and is summarized in Table 5.17.

Waste segregation is performed at the disposal facility, and following random emplacement of the waste packages in the disposal cells, a thick clay cover is emplaced which is compacted using improved compaction techniques.

Table 5.17 Summary of Cases 8 and 9

Case 8 - Further Improved Waste Forms

- Regular SLB trench
- Waste spectrum 3
- SLB with a thicker clay cap
- Compaction using improved methods
- Segregation of wastes containing chelates
- Segregation of compressible wastes
- Random disposal of waste using a sand backfill
- Layering used as an intruder barrier

Case 9 - Improved Waste Forms and Cement Walled Trench

- Cement walled trench
- Waste spectrum 3
- Use of thicker, compacted cap
- Segregation of wastes containing chelates
- Segregation of compressible wastes
- Stacked disposal of waste
- Grouting emplaced between waste packages
- Cement walled trench used as an intruder barrier

Ground-Water Impacts

Maximum ground-water impacts for this case for each of the four biota access locations are shown in Table 5.18. It is useful to compare these results with those for Case 7D. Compared with Case 7D, whole body intruder and boundary well exposures for Case 8 are only slightly reduced. This is because as in the case of waste spectra 1 and 2, no processing is performed on the N-TARGETS and N-TRITIUM waste streams. Releases of tritium from these waste streams are essentially at the same rates as in Case 7D. Comparing whole body exposures at the population well, however, reveals a reduction in exposures by a factor of between 5 and 6. Similarly, thyroid exposures for Case 8 have been reduced with respect to Case 7D. In Case 7D, maximum thyroid exposures at the intruder and boundary wells are about .5 millirem and occur at about 6,000 years following license termination. In Case 8, maximum intruder and boundary well thyroid exposures are about .22 millirem, a reduction by a factor of about 2.3.

Table 5.18 Summary of Ground-Water Impacts for Cases 8 and 9

	(mrem/yr)						
Cases	Body	Bone	Liver	Thyroid	Kidney	Lung	GI
(8)							
Intruder	2.119E-2	4.629E-3	2.119E-2	2.216E-2	2.119E-2	2.2119E-2	2.119E-2
Well	(100)	(6,000)	(100)	(6,000)	(100)	(100)	(100)
Boundary	1.094E-1	4.612E-3	1.094E-1	2.216E-1	1.094E-1	1.094E-1	1.094E-1
Well	(70)	(6,000)	(70)	(6,000)	(70)	(70)	(70)
Population	2.913E-4	1.010E-3	2.306E-4	6.994E-2	2.786E-4	2.022E-4	2.540E-4
Well	(10,000)	(10,000)	(10,000)	(10,000)	(10,000)	(10,000)	(10,000)
Surface	1.228E-5	4.109E-5	9.518E-6	3.187E-3	1.170E-5	8.223E-6	1.056E-5
Water	(10,000)	(10,000)	(10,000)	(10,000)	(10,000)	(10,000)	(10,000)
(9)							
Intruder	8.060E-4	1.977E-4	8.060E-4	1.843E-2	8.060E-4	8.060E-4	8.060E-4
Well	(100)	(6,000)	(100)	(4,000)	(100)	(100)	(100)
Boundary	4.161E-3	1.968E-4	4.161E+3	1.843E-2	4.161E-3	4.161E-3	4.161E-3
Well	(70)	(6,000)	(70)	(4,000)	(70)	(70)	(70)
Population	1.617E-5	4.362E-5	1.111E-5	5.822E-3	1.512E-5	1.512E-6	8.742E-5
Well	(10,000)	(10,000)	(10,000)	(10,000)	(10,000)	(10,000)	(10,000)
Surface	6.912E-7	1.762E-6	4.606E-7	2.653E-4	6.424E-7	3.527E-7	5.472E-7
Water	(10,000)	(10,000)	(10,000)	(10,000)	(10,000)	(10,000)	(10,000)

Other Impacts

Other impacts are listed on Table 5.19. Of interest are short-term population exposures, short-term occupational exposures, and costs. Due to the incineration of the waste, airborne releases are assumed to occur in the environs of the waste generators and the regional processing center. Total airborne population exposures over 20 years due to processing by waste generators are 7.86E+6 man-millirem, which reduce to about 3.93E+5 man-millirem per year or about 19 man-millirem per m^3 of waste processed. Waste processing activities at the regional processing center are estimated to result in a total population dose of 3.74E+4 man-millirem over 20 years, or about 1,870 man-millirem per year (0.09 man-millirem per m^3 of processed waste disposed at the disposal facility). Given the 480,000 persons assumed to reside within 50 miles of the regional processing center, this averages to approximately 3.9 E-3 millirem per year per person within 50 miles.

Table 5.19 Other Impacts Associated with Cases 8 and 9

Impacts	Case 8	Case 9
Short-term population exposures: (man-mrem)		
Processing at waste generator	+7.86E+6	+7.86E+6
Processing at regional processing center	3.74E+4	3.74E+4
Waste transportation	5.04E+5	5.04E+5
Short-term occupational exposures: (man-mrem)		
Processing at waste generator	+1.18E+6	+1.18E+6
Processing at regional processing center	2.45E+4	2.45E+4
Waste transportation	5.40E+6	5.40E+6
Waste disposal	2.43E+6	4.86E+6
Waste generation and transport costs: ($)		
Processing at waste generator	+1.15E+9	+1.15E+9
Processing at regional processing center	9.50E+7	9.50E+7
Waste transportation	1.83E+8	1.83E+8
Disposal costs: ($)		
Design and Operations	1.93E+8	3.14E+8
Postoperational	1.22E+7	1.22E+7
Total:	2.05E+8	3.26E+8
Unit ($/m^3)*	417	663
Energy use: (gal)	+6.08E+7	+6.10E+7
Land use: (m^2)	1.71E+5	2.68E+5
Waste volume disposed: (m^3)		
Regular:		
Chemical-stable	8.68E+3	1.16E+4
Chemical-unstable	6.57E+4	6.57E+4
No chemical-stable	4.03E+5	4.03E+5
No chemical-unstable	1.15E+4	1.15E+4
Total	4.89E+5	4.92E+5
Layered:		
Chemical-stable	2.87E+3	0
Chemical-unstable	0	0
No chemical-stable	0	0
No chemical-unstable	0	0
Total	2.87E+3	0
Hot waste facility:	0	0
Total disposed:	4.92E+5	4.92E+5
Total volume not acceptable: (m^3)	1.13E+3	1.13E+3

*The indicated unit costs are obtained from dividing the total disposal costs by the volume of waste delivered to the disposal facility, which is about $490,000 m^3 for Cases 8 and 9. If unit disposal costs were calculated using the "unprocessed" (waste spectrum 1) volumes disposed for Cases 1 through 6, unit costs would be as follows:

Case 8: $209/m^3
Case 9: $333/m^3

Population exposures from transportation are seen to be less than those for Cases 1 through 6 (waste spectrum 1) and are in the same range as those of Cases 7A through 7D (waste spectrum 2). In Case 8, a decreased volume of waste must be shipped, which would tend to reduce exposures. This is balanced by the increased number of higher activity waste shipments that must be transported to the disposal facility.

Short-term occupational exposures are, in several cases, reduced from Cases 7A through 7D. For example, total occupational exposures from processing waste streams at waste generator facilities and at the regional processing center are reduced from Cases 7A-7D. This is because the occupational exposures are estimated based upon the time required to be spent in a radiation environment processing the waste. It requires less time to process a given volume of waste by incineration; hence, the estimated occupational exposures are reduced. Waste transportation occupation exposures are somewhat reduced with respect to Cases 7A-7D while, disposal facility occupational exposures are somewhat higher. This is because although there is a decrease in the volume of waste delivered to the disposal facility, this is balanced by an increase in the number of higher activity waste containers. In the calculations, less time is taken in proximity to the higher activity waste streams during waste loading and transportation than during waste unloading and disposal. This results in slightly lower transportation occupational exposures and slightly higher waste disposal facility occupational exposures.

The estimated total costs for waste processing, transport, and disposal are seen to be significantly higher than for the other cases. The most significant additional costs are, of course, incurred during waste processing. As can be seen, total additional processing costs at the waste generators are approximately 2.4 times those calculated for Cases 7A-7D. Processing charges at the regional processing center run at about \$927/m^3 (\$26.25/ft^3), and are raised over Cases 7A-7D by a factor of about 2.6. Processing costs in this range again brings up the question of equitability. Incinerating the waste and solidifying the remaining ash does place the waste into a much more stable form. For some facilities which generate very large volumes of combustible waste, incineration may be an effective means of reducing transportation and disposal costs. It would be a difficult requirement to implement generally, however, as a means of stabilizing otherwise low hazard waste. Such extensive processing activities could not be implemented within a short time frame and would probably be a financial burden to most licensees--particularly small licensees such as hospitals and research laboratories.

Transport costs are about a factor of 1.14 less than those for Cases 1 through 6 and slightly lower than those for Cases 7A-7D. This is because on one hand, less shipments are required for transport of a given activity of waste to the disposal facility. On the other hand, more use must be made of expensive shielded transport vehicles and casks.

Total disposal costs relative to Cases 7A-7D are reduced. Unit costs, however, are raised. Because only about 4% of the waste is still in an unstable form and improved disposal cell covers and compaction techniques are implemented, the disposal facility is assumed to be placed in a stable condition.

Also predictably, land use is seen to drop to 1.65E+5 m^2, which is a reduction by a factor of 2 with respect to Case 1 and by a factor of 1.4 with respect to Case 7. Incremental fuel use is seen to be significantly greater than the preceding cases, which is basically caused by the increased use fuel to incinerate the waste.

5.2.4.7 Case 9 - Walled Trenches and Further Improved Waste Forms

This case investigates a rather extreme example of near-surface radioactive waste disposal. As in Case 8, waste spectrum 3 is assumed to be applied. However, in Case 9 as in Case 5, all wastes are assumed to be disposed into concrete walled trenches. The waste streams are segregated, stacked within the disposal cells, and grouted in place. A summary of this case is included as Table 5.17.

Ground-Water Impacts

Potential ground-water impacts are the lowest of the cases considered. Maximum exposures at the intruder and boundary wells are in the range of 10^{-4} to 10^{-3} mrem for most organs. Maximum thyroid exposures at the intruder and boundary wells are approximately .02 mrem at 4,000 years following license termination. The difference between the thyroid exposures and exposures to all other organs is more striking for the population well and surface water exposures. For the population well, for example, organ doses except thyroid are in the range of 10^{-7} to 10^{-5} millirem while thyroid exposures are in the range of 10^{-4} to 10^{-3} millirem.

Other Impacts

Other impacts are presented in Table 5.19. Since the same waste spectra is used, most of the short-term radiological impacts are the same as those for Case 8. However, occupational exposures are estimated to significantly rise due to the use of the concrete walled trench. Additional time must be spent in close proximity to the waste containers while emplacing the (stacked) waste and while grouting the waste mass.

Total disposal costs are estimated to be significantly ($123 million over 20 years) higher than for Case 8. Due to the use of the walled trench, design and operating costs are about $316 million, while again a low level of long term care and long term care costs are estimated ($12.2 million). Incremental energy use is some what higher than that for Case 8. Land use is also higher--e.g., by about a factor of about 1.6.

5.2.4.8 Case 10 - High Integrity Containers

The preceding case studies investigated a number of ways to improve the stability of the disposal facility. As discussed, improved facility stability can be achieved by segregating unstable low activity material from the higher activity waste material and by stabilizing the higher activity waste material. This stability can be achieved through disposal facility design and operating practices