United States
Environmental Protection
Agency

Office of Research and
Development
Washington DC 20460

September 1994

Wastewater Handbook
I

EPA

Guide to Septage Treatment and Disposal

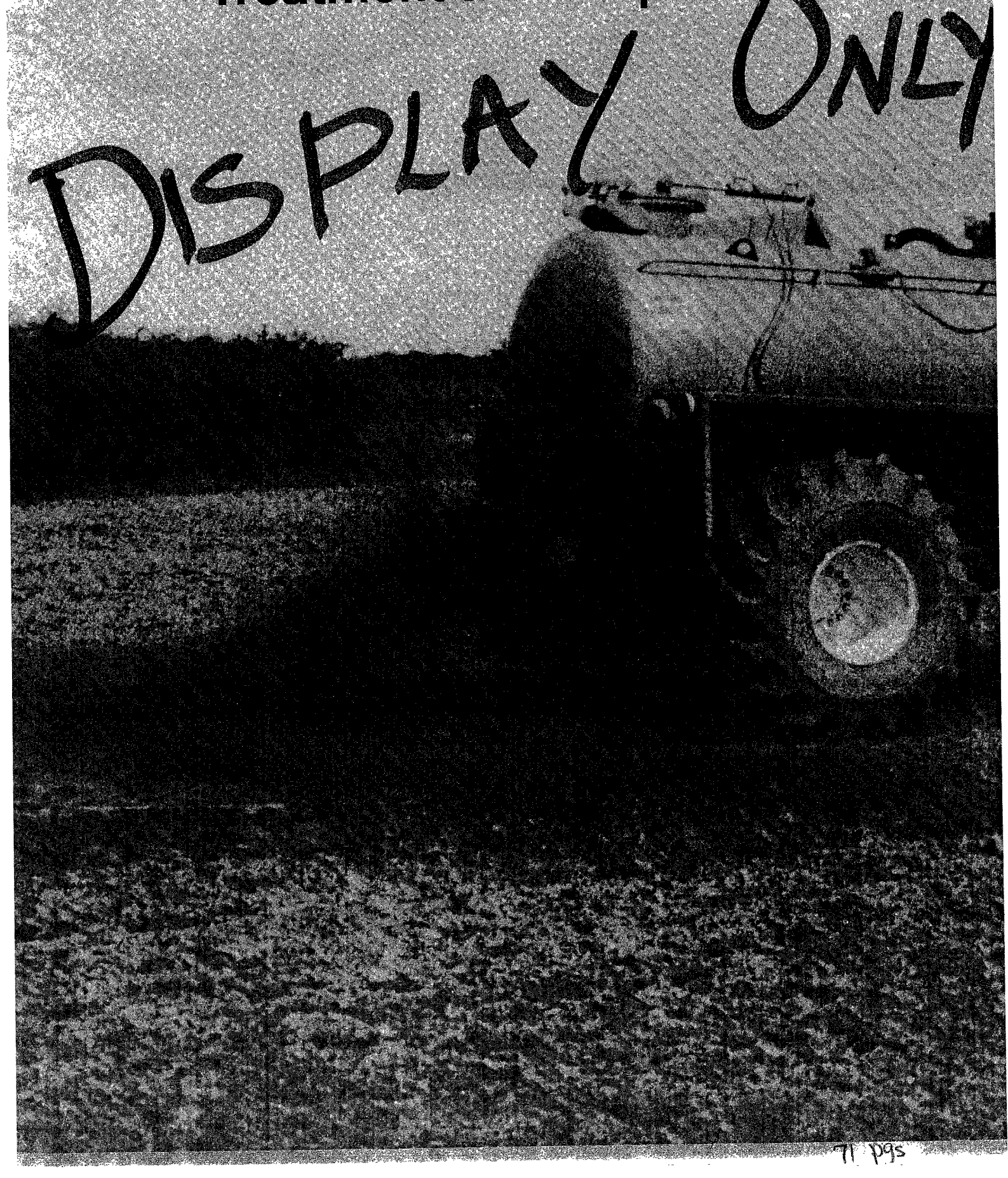
DISPLAY ONLY

71 pgs

EPA/625/R-94/002
September 1994

Guide to Septage Treatment and Disposal

U.S. Environmental Protection Agency
Office of Research and Development
Office of Science, Planning, and Regulatory Evaluation
Center for Environmental Research Information
Cincinnati, OH

Printed on Recycled Paper

Notice

This document has been reviewed in accordance with the U.S. Environmental Protection Agency's peer and administrative review policies and approved for publication. Mention of trade names or commercial products does not constitute endorsement or recommendation for use.

Contents

Page

List of Figures vi

List of Tables vii

Acknowledgments viii

Chapter 1. Introduction 1

Part I. Administrators' Guide 3

Chapter 2. Overview of Septage Handling Options 4

Chapter 3. Regulatory Requirements 11

Chapter 4. Local Responsibilities 13

Part II. Inspectors' and Haulers' Guide 17

Chapter 5. Inspecting Septic Tanks 18

Chapter 6. Pumping Septic Tanks 22

Chapter 7. Regulatory Requirements 24

Part III. Facility Managers' and Operators' Guide 25

Chapter 8. Septage Receiving 26

Chapter 9. Land Application 30

Chapter 10. Treatment at Wastewater Treatment Plants 35

Chapter 11. Independent Septage Treatment Facilities 38

Chapter 12. Odor Control 41

References 45

Appendix A. Sources of Additional Information 47

Appendix B. List of State and EPA Regional Septage Coordinators 51

Appendix C. Example of Local Permit for Septage Disposal 59

List of Figures

Figure		Page
2-1	Diagram of aerated static pile (top) and windrow composting processes	10
4-1	Example of proposed local ordinance for septage disposal	16
5-1	Typical residential septic tank	19
5-2	Measuring solids accumulation in a septic tank	20
8-1	Examples of septage receiving station layouts	27
8-2	Example of a septage manifest	28
9-1	Certification of pathogen reduction and vector attraction requirements	34
10-1	Allowable septage loadings to a sewage treatment plant having a septage holding tank	36
12-1	Diagram of a biofilter for odor control	44

List of Tables

Table		Page
2-1	Overview of Approaches to Septage Treatment and Disposal	4
2-2	Characteristics of Septage: Conventional Parameters	5
2-3	Characteristics of Septage: Metals and Organics	6
2-4	Summary of Land Application Options	7
2-5	Summary of Septage Stabilization Options	8
2-6	Summary of Options for Handling Septage at WWTPs	8
3-1	Examples of State Septage Regulations	12
4-1	Guidelines for Selecting a Septage Disposal System	14
8-1	O&M Checklist for Septage Receiving Facilities	29
9-1	O&M Checklist for Equipment Used in Applying Septage to Land	31
9-2	Federal Crop and Site Restrictions for Land Application of Domestic Septage	32
9-3	Procedure for Lime-Stabilizing Septage Within the Pumper Truck	33
10-1	Impacts of Septage Addition to a WWTP	35
10-2	O&M Checklist for Handling Septage at a WWTP	37
11-1	O&M Checklist for Lime Stabilization of Septage	38
11-2	O&M Checklist for Dewatering Using Drying Beds	39
11-3	O&M Checklist for Mechanical Dewatering Systems	39
11-4	O&M Checklist for Static Pile Composting of Septage Solids	40
11-5	O&M Checklist for Windrow Composting of Septage Solids	40
12-1	Guidelines for Minimizing Odor Emissions at a Septage Receiving Facility	41
12-2	Guidelines for Minimizing Odor Problems at Land Application Sites	41
12-3	Summary of Odor Treatment Alternatives	42
12-4	Recommended Design Criteria for a Biofilter	43

Acknowledgments

The principal author of this guide was Robert P.G. Bowker, Bowker & Associates, Inc., Portland, Maine, under Contract No. 68-C0-0068 to Eastern Research Group, Inc. (ERG), Lexington, Massachusetts. Randy Revetta, U.S. Environmental Protection Agency (EPA) Center for Environmental Research Information (CERI), Cincinnati, Ohio, was the EPA Project Officer. James Kreissl, CERI, provided substantial technical editing and guidance during the development of the document. Editing and graphics support was provided by ERG under the direction of Heidi Schultz.

We would like to acknowledge the following reviewers for their important contributions to this effort:

Marcia Deizman and Joseph Rezek
Rezek Henry Meisenheimer & Gende, Inc.
Libertyville, Illinois

Tom Ferrero
Nutrecon, Inc.
Ambler, Pennsylvania

Tim Frank
National Association of Waste Transporters
Sayville, New York

Anish Jantrania
National Small Flows Clearinghouse
Morgantown, West Virginia

Bob Kendall
Cole Publishing
Three Lakes, Wisconsin

John Melby
Wisconsin Department of Natural Resources
Madison, Wisconsin

Mark Ronayne
Oregon Department of Environmental Quality
Portland, Oregon

Robert Rubin
North Carolina State University
Raleigh, North Carolina

Kevin Sherman
Florida Department of Health and Rehabilitative Services
Tallahassee, Florida

John Smith
J.M. Smith & Associates
Cincinnati, Ohio

Ellen Vause
Florida Septic, Inc.
Hawthorne, Florida

John Walker
EPA Office of Water
Washington, DC

Hollis Warren
Hollis Warren, Inc.
Wyoming, Delaware

Chapter 1

Introduction

1.1 Purpose

The purpose of this guide is to present practical information on the handling, treatment, and disposal of septage in a concise, recommendations-oriented format for easy use by administrators of waste management programs, septage haulers, and managers or operators of septage handling facilities. The guide is not intended to provide detailed engineering design information.

"Septage" is the material removed from a septic tank by pumping. This guide focuses on septage of domestic origin. Industrial septage containing toxic compounds or heavy metals requires special handling, treatment, and disposal methods, a description of which is beyond the scope of this document. Although certain commercial septages may be appropriately treated with domestic septage, these septages must be evaluated on a case-by-case basis.

When properly managed, domestic septage is a resource. A valuable soil conditioner, septage contains nutrients that can reduce reliance on chemical fertilizers for agriculture. A good septage management program recognizes the potential benefits of septage and employs practices to maximize these benefits.

1.2 User's Guide

This field guide is divided into three parts. **Part I: Administrators' Guide** provides administrative guidelines for managing the collection and treatment of septage. Chapters within Part I cover the following topics:

- Septage Handling Options (Chapter 2)
- Regulatory Requirements (Chapter 3)
- Local Responsibilities (Chapter 4)

Part II: Inspectors' and Haulers' Guide is designed for those involved in the inspection of septic tanks and in the pumping and transport of septage. Chapters cover the following:

- Inspecting Septic Tanks (Chapter 5)
- Pumping Septic Tanks (Chapter 6)
- Regulatory Requirements (Chapter 7)

Part III: Facility Managers' and Operators' Guide provides information on the operation and maintenance of septage treatment and disposal facilities. Chapters cover:

- Septage Receiving (Chapter 8)
- Land Application (Chapter 9)
- Treatment at Wastewater Treatment Plants (Chapter 10)
- Independent Septage Treatment Facilities (Chapter 11)
- Odor Control (Chapter 12)

Key references and information sources have been identified in Appendix A for more detailed information on system design and operation, applicable federal regulations, and facility planning and management. Appendix B lists state and EPA regional septage coordinators. Appendix C provides an example of a local permit for septage disposal.

Although the information contained in Parts I, II, and III is targeted for the specific audiences described above, readers are urged to review all sections of the guide to gain a broader understanding of the technical, administrative, and regulatory issues that a successful septage management program must address. Specific requirements for such a program must be developed on a case-by-case basis.

Part I

Administrators' Guide

Chapter 2
Overview of Septage Handling Options

Septage is a highly variable organic waste that often contains large amounts of grease, grit, hair, and debris and is characterized by an objectionable odor and appearance, a resistance to settling and dewatering, and the potential to foam. These characteristics make septage difficult to handle and treat. The major reason for providing adequate treatment and disposal systems is to protect public health and the environment, as septage may harbor disease-causing viruses, bacteria, and parasites.

Septage treatment and disposal facilities are either privately or publicly owned. Larger municipalities often have the technical and managerial capabilities necessary to exercise full control over septage handling, treatment, and disposal. Other municipalities are attracted to privately owned systems because these systems relieve municipalities of the burden of operating and maintaining a facility, establishing tipping fees, and monitoring septage deliveries. A municipality might, however, remain responsible for ensuring the safe handling and disposal of septage generated within its boundaries, for establishing local ordinances or regulations governing septage handling, and for meeting all state and federal permit requirements and regulations.

Alternatives for the treatment and disposal of septage fall into the following categories:

- Land application
- Treatment at wastewater treatment plants (WWTPs)
- Treatment at independent septage treatment plants

Advantages and disadvantages of these options are presented in Table 2-1. Each alternative is discussed in further detail in Section 2.2 through Section 2.4.

Land application of septage, the most common means of septage disposal in the United States, is likely to be the most economical alternative. Unfortunately, availability of suitable land with adequate buffer separation from residential areas is limited in many urban and suburban areas, and the public is often concerned about the odor and health impacts of such practices. Disposal at an existing WWTP is a viable and economical option if the plant is reasonably close to the source and has adequate facilities to handle the material. Independent septage treatment plants are the most costly of the three categories, and municipalities generally consider them only if the first two options are not technically or economically feasible. (Section 4.1 provides guidelines for selecting an appropriate septage treatment and disposal option.)

Table 2-1. Overview of Approaches to Septage Treatment and Disposal

Method	Description	Advantages	Disadvantages
Land application	Septage is applied to sites infrequently visited by the public. Stabilization to reduce odors, pathogens, and vector attraction may be encouraged or required by the state. Land application may be by hauler truck or other vehicle to apply septage to the land surface, or by specialized equipment to inject septage beneath the soil surface.	•Simple, economical •Recycles organic material and nutrients to the land •Low energy use	•Need for holding facility during periods of frozen or saturated soil •Need for relatively large, remote land area
Treatment at WWTPs	Septage is added to the plant headworks, upstream manhole, or sludge handling process for cotreatment with sewage or sludge. Septage volumes that can be accommodated depend on plant capacity and types of unit processes employed.	•Most plants are capable of handling some septage •Centralizes waste treatment operations	•Potential for plant upset if septage addition not properly controlled •Increased residuals handling and disposal requirements
Treatment at independent septage treatment plants	A facility is constructed solely for the treatment of septage. Treatment generates residuals which must be disposed of.	•Provides regional solution to septage management	•High capital and operation and maintenance (O&M) costs •Requires high skill levels for operation

2.1 Septage Characteristics

2.1.1 Physical Characteristics

Its physical characteristics make septage difficult and objectionable to handle and treat. High levels of grease, grit, hair, and large solids in septage can clog pipes and pumps, and the parasites, viruses, and bacteria that septage normally contains can cause disease. The anaerobic nature of septage results in the presence of odorous compounds (e.g., hydrogen sulfide, mercaptans, and other organic sulfur compounds), which are released with greater frequency when septage is exposed to the turbulent conditions that can occur at a WWTP or during discharge to agricultural land. Foaming can also be a problem in processes where air is blown into the septage. For these reasons, septage treatment facilities should be isolated from homes and businesses in the community.

Many factors affect the physical characteristics of septage, including user habits; septic tank size, design, and pumping frequency; water supply characteristics and piping materials; the presence of water conservation fixtures and garbage disposals; the use of household chemicals and water softeners; and climate. Where information about septage characteristics is needed to design septage receiving and treatment systems (usually only nitrogen content information is necessary for land application of domestic septage), local analytical data should be collected. Many municipalities have reported substantial discrepancies between published data and actual characteristics of local septage. Septage characteristics for conventional wastewater parameters and nutrients are presented in Table 2-2, and for metals and organics in Table 2-3.

Samples of local septage for characterization should be collected during discharge of the pumper truck after the material has been mixed. Three individual samples collected near the beginning, middle, and end of the truck discharge will yield a fairly representative sample. Because of wide variations in septage characteristics, a large number of truckloads must be sampled. When septage is applied to land, however, good recordkeeping is sufficient because variability in characteristics is less critical to the overall operation.

Table 2-2. Characteristics of Septage: Conventional Parameters (1)

Parameter	Concentration (mg/L) Average	Minimum	Maximum
Total solids	34,106	1,132	130,475
Total volatile solids	23,100	353	71,402
Total suspended solids	12,862	310	93,378
Volatile suspended solids	9,027	95	51,500
Biochemical oxygen demand	6,480	440	78,600
Chemical oxygen demand	31,900	1,500	703,000
Total Kjeldahl nitrogen	588	66	1,060
Ammonia nitrogen	97	3	116
Total phosphorus	210	20	760
Alkalinity	970	522	4,190
Grease	5,600	208	23,368
pH	—	1.5	12.6

2.1.2 Generation Rates

Septage generation rates vary widely from month to month due to weather and geography. For example, frozen ground may limit pumping to warmer months in locations where tank risers do not extend to the surface, or high ground water during rainy seasons may cause septic tank effluent to surface, increasing service calls from homeowners hoping to alleviate the condition. (Only temporary relief is possible.) Daily and weekly variations in septage generation rates also arise due to homeowner habits and attitudes, with peak daily rates reaching as much as five times the average daily rates.

Several approaches that a community can use to estimate generation rates are discussed below. Each of these approaches must consider both present and projected populations, as well as the number of dwellings served by septic tank systems.

The most accurate approach is to collect information from actual records of local septage haulers, treatment plants receiving septage, and other sources. This approach takes into account the variations in septage generation rates mentioned above and thus provides data specific to the municipality.

Another approach is to estimate the number of septic tanks and assume an average tank volume and pumpout frequency. An example calculation for a small community is shown below:

$$\text{Septage generation rate} = \frac{640 \text{ tanks} \times 1{,}000 \text{ gal/tank}}{\text{4-yr pumping interval}}$$

$$= 160{,}000 \text{ gal/yr}$$

The least accurate approach is to assume a per-capita generation rate of 50 to 70 gal/capita/year:

Septage generation rate

$$= 2{,}250 \text{ people} \times 60 \text{ gal/cap/yr}$$

$$= 135{,}000 \text{ gal/yr}$$

2.2 Land Application

Land application of septage is an economical and environmentally sound method of handling septage that is the method of choice for most rural communities with sufficient suitable land. Various options for land application of septage are summarized in Table 2-4.

A properly managed land application program achieves beneficial reuse of waste organic matter and nutrients without adversely affecting public health. Meeting regulatory requirements, finding suitable sites, and overcoming local opposition may be difficult, however. Federal regulations promulgated in February 1993 simplify the rules governing land application of septage and provide minimum guidelines for state incorporation. Individual state regulations, however, may be more stringent. The federal regulations are discussed in Chapters 3 and 9. A community's responsibilities in conforming to state and local regulations and dealing with the public are described in Chapter 4.

In many cases, septage is stabilized before application to land. "Stabilization" is a treatment method designed to reduce levels of pathogenic organisms, lower the potential for putrefaction, and reduce odors. Practical options for stabilization of septage are summarized in Table 2-5. The simplest and most economical technique for stabilization of septage is the addition of lime or other alkaline material, which is added to liquid septage in quantities sufficient to increase the pH of the septage to at least 12.0 for 30 minutes. Federal regulations regarding land application of septage are less restrictive if alkaline stabilization is practiced (see Chapters 3 and 9). Other stabilization options, such as aerobic digestion, are relatively simple but have higher capital and operating costs.

Chapter 9 discusses the operation and maintenance of septage land application systems. Appendix A lists additional references on the subject.

2.3 Treatment at WWTPs

Several approaches can be used to treat septage at WWTPs:

- Addition to the liquid treatment system
- Addition to the sludge handling train
- Combinations of the above

Table 2-3. Characteristics of Septage: Metals and Organics (2)

Parameter	Concentration (mg/L) Average	Minimum	Maximum
Metals			
Iron	39.3	0.2	2,740
Zinc	9.97	<0.001	444
Manganese	6.09	0.55	17.1
Barium	5.76	0.002	202
Copper	4.84	0.01	261
Lead	1.21	<0.025	118
Nickel	0.526	0.01	37
Chromium (total)	0.49	0.01	34
Cyanide	0.469	0.001	1.53
Cobalt	0.406	<0.003	3.45
Arsenic	0.141	0	3.5
Silver	0.099	<0.003	5
Cadmium	0.097	0.005	8.1
Tin	0.076	<0.015	1
Mercury	0.005	0.0001	0.742
Organics			
Methyl alcohol	15.8	1	396
Isopropyl alcohol	14.1	1	391
Acetone	10.6	0	210
Methyl ethyl ketone	3.65	1	240
Toluene	0.17	0.005	1.95
Methylene chloride	0.101	0.005	2.2
Ethylbenzene	0.067	0.005	1.7
Benzene	0.062	0.005	3.1
Xylene	0.051	0.005	0.72

The available options for handling septage at a WWTP are summarized in Table 2-6 and discussed below.

The majority of plants that accept septage do so either at the headworks of the plant or at a manhole upstream of the plant. Some plants that treat large volumes of septage provide receiving and equalization facilities to allow septage addition at a relatively constant, controlled rate at one or more locations in the plant. This method of septage addition minimizes the potential for short-term

Table 2-4. Summary of Land Application Options

Method	Description	Advantages	Disadvantages
Surface Application			
Spray irrigation	Pretreated (e.g., screened) septage is pumped through nozzles and sprayed directly onto land. Must be incorporated into soil within 6 hr if not lime stabilized.	•Can be used on steep or rough land. •Minimizes disturbance of soil by trucks.	•Large land area required. •High odor potential during application. •Possible pathogen dispersal and vector attraction if not lime stabilized. •Storage tank or lagoon required during periods of wet or frozen ground. •Potential for nozzle plugging.
Ridge and furrow irrigation	Pretreated septage is applied directly to furrows. Must be incorporated into soil within 6 hr if not lime stabilized.	Lower power requirements and odor potential than spray irrigation.	•Limited to 0.5 to 1.50% slopes. •Storage lagoon required.
Hauler truck spreading	Septage is applied to soil directly from hauler truck using a splash plate to improve distribution. Must be incorporated into soil within 6 hr if not lime stabilized.	Same truck can be used for transport and disposal.	•High odor potential during and immediately after spreading. •Storage tank or lagoon required during wet or freezing conditions. •Slope may limit vehicle operation. •Hauler truck access limited by soil moisture; truck weight causes soil compaction.
Farm tractor and wagon spreading	Liquid septage or septage solids are transferred to farm equipment for spreading. Must be incorporated into soil within 6 hr if not lime stabilized.	Allows for application of liquid septage or septage solids. Increases opportunities for application compared to hauler truck spreading.	•High odor potential during and immediately after spreading. •Storage tank or lagoon required. •Requires additional equipment (tractor and wagon).
Subsurface Incorporation			
Tank truck or farm tractor with plow and furrow cover	Liquid septage is discharged from tank into furrow ahead of single plow and is covered by second plow.	•Minimal odor and vector attraction compared with surface application. •Satisfies EPA criteria for reduction of vector attraction.	•Slope may limit vehicle operation. •Storage tank or lagoon required during periods of wet or frozen ground.
Subsurface injection	Liquid septage is placed in narrow opening created by tillage tool.	•Minimal odor and vector attraction compared with surface application. •Satisfies EPA criteria for reduction of vector attraction.	•Slope may limit vehicle operation. •Specialized equipment and vehicle may be costly to purchase, operate, and maintain. •Storage tank or lagoon required during wet or frozen conditions.

overloading of downstream processes. Treatment plants with primary clarifiers are generally best suited to receive septage in the liquid stream. Septage addition is much more likely to upset smaller plants without primary clarifiers.

Septage also can be introduced into the sludge handling train of a WWTP. For example, screened, degritted septage can be pumped to aerobic or anaerobic digesters, sludge holding tanks, or gravity thickeners. Such practices allow blending of the septage with primary and/or secondary biological sludge prior to thickening, stabilization, or dewatering. High ratios of septage to sludge, however, may adversely affect these processes. For example, septage dewaters poorly, and direct dewatering of waste sludge containing raw, unconditioned septage may cause a reduction in dewatering performance. Because separate screening and grit removal facilities are recommended, and due to the potential for adverse effects on sludge dewatering, septage addition to the liquid stream (upstream of wastewater screening and grit removal systems) is more commonly practiced at small to medium-sized plants. Several manufacturers offer equipment specifically designed for the screening and degritting of septage.

Chapter 10 discusses operation and maintenance considerations for plants receiving septage, and presents guidelines for estimating allowable septage loadings. Additional references are listed in Appendix A.

2.4 Treatment at Independent Septage Treatment Plants

For situations where land is unavailable and WWTPs are too far away or of insufficient capacity, use of independent septage treatment facilities may be warranted. Only a small number of mechanical septage treatment facilities exist in

Table 2-5. Summary of Septage Stabilization Options

Method	Description	Advantages	Disadvantages
Alkali stabilization	Lime or other alkaline material is added to liquid septage to raise pH to 12.0 for minimum of 30 min.	•Very simple; minimal operator attention. •Low capital and O&M costs. •Provides temporary reduction in sulfide odors. •Meets EPA criteria for reduction in vector attraction. •Reduces EPA site restriction requirements for land application.	•Increases mass of solids requiring disposal. •Handling of lime may cause dust problems. •Lime feed and mixing equipment require regular maintenance.
Aerobic digestion	Septage is aerated for 15 d to 20 d in an open tank to achieve biological reduction in organic solids and odor potential. (Time requirements increase with lower temperatures.)	•Relatively simple. •Can provide reduction in odors.	•High power cost to operate aeration system. •Large tanks or basins required. •Cold temperatures require much longer digestion periods.
Anaerobic digestion	Septage is retained for 15 d to 30 d in an enclosed vessel to achieve biological reduction in organic solids.	Generates methane gas, which can be used for digester heating or other purposes.	•Requires skilled operator to maintain process control. •High maintenance requirements for gas handling equipment. •High capital costs. •Generally not used except for cotreatment with sewage sludge.
Composting	Liquid septage or septage solids are mixed with bulking agent (e.g., wood chips, sawdust) and aerated mechanically or by turning. Biological activity generates temperatures sufficiently high to destroy pathogens.	Final product is potentially marketable and attractive to users as soil amendment.	•Costly materials handling requirement. •Requires skilled operator process control. •High odor potential. •High operating costs.

Table 2-6. Summary of Options for Handling Septage at WWTPs

Method	Description	Advantages	Disadvantages
Septage addition to upstream sewer manhole	Septage is added to a sewer upstream of the WWTP.	•Simple and economical due to very simple receiving station design. •May provide substantial dilution of septage prior to reaching WWTP.	•Odor potential near manhole. •May be difficult to control access. •Potential for accumulation of grit and debris in sewer. •Only feasible with large sewers and treatment plants.
Septage addition to plant headworks	Septage is added to sewage immediately upstream of screening and grit removal processes.	•Simple and economical due to very simple receiving station design. •Allows control of septage discharge by WWTP staff.	•May affect WWTP processes if septage addition is uncontrolled or treatment plant is too small. •Increases odor potential at treatment plant.
Septage addition to sludge handling process	Septage is handled as a sludge and processed with WWTP sludge after pretreatment in receiving station.	•Reduces loading to liquid stream processes. •Eliminates potential for affecting effluent quality.	•May have adverse effect on sludge treatment processes such as dewatering. •May cause clogging of pipes and increase wear on pumps if not screened and degritted in receiving station. •Expensive due to receiving station cost.
Septage addition to both liquid stream and sludge handling processes	Septage is pretreated to separate liquid and solid fractions, which are then processed accordingly.	•Provides more concentrated sludge for processing. •Reduces organic loading to liquid stream processes and hydraulic loading to sludge processes. •Increases flexibility of subsequent processing steps.	•Requires increased operations for septage pretreatment at receiving station. •Expensive due to receiving station cost.

the United States. Such plants can be mechanically complex and incorporate many unit processes to handle both the liquid and solid fractions of septage.

Using lime in septage-only treatment facilities is attractive since this approach can provide both conditioning and stabilization prior to dewatering. EPA conducted pilot testing of a simple septage handling scheme that entailed adding lime to the septage to achieve the necessary pH, followed by dewatering on sand drying beds (3). A cake solids content of 25 percent was achieved within 6 days with 8-in. (20-cm) lifts. An independent septage treatment facility employing this process should incorporate initial screening and degritting, with treatment and disposal of the underdrainage from the drying beds. The dewatered septage can be applied to land as a soil conditioner or disposed of in a sanitary landfill.

Another successful approach, used at a private facility in Pennsylvania, is to raise the pH to 12 to achieve stabilization, then allow the solids to separate from the liquid. The settled sludge is then dewatered on a plate-and-frame filter press until solids reach 40 to 45 percent. Dewatered solids are then further dried by stacking in windrows, which are turned mechanically. The dried solids are then applied to agricultural land using a manure spreader. The liquid fraction is discharged to a nearby municipal sewer. This system is actually a hybrid since it involves discharge to a WWTP, for which an industrial discharge permit is necessary.

Composting of septage is also a feasible approach for independent septage treatment systems in areas where bulking agents are plentiful and a demand for composted product exists. The final compost product may be attractive to municipalities, commercial operations (e.g., nurseries), and homeowners as a soil conditioner. If bulking agent requirements exceed availability and marketability limits, this approach may become costly. For this reason, dewatering of the septage prior to composting is usually preferred. Septage is difficult to dewater, and the demand for conditioning chemicals is high and variable from load to load. A combination of lime and ferric chloride has been successfully used, as have polymers. Unit processes likely to be used for dewatering conditioned septage at such a facility include screw presses, gravity- and vacuum-assisted drying beds, and sand drying beds. Mobile septage dewatering systems, originally developed in Europe, are now available in the United States (see Section 6.1).

Separation of solids from liquid via settling and/or dewatering generates a liquid fraction that must be managed. Options include treatment and discharge to the land or surface water and disposal at a WWTP. State and local permits must be obtained for such facilities.

Composting processes applicable to stabilization of septage in rural areas include aerated static pile composting and windrow composting. Schematic diagrams of these processes are shown in Figure 2-1. In aerated static pile composting, air is forced through the septage/bulking agent mixture using a blower and air distribution piping, which helps to maintain aerobic conditions, and to control pile temperature and moisture. In the windrow process, these parameters are controlled by turning the piles, usually with specialized equipment. Windrow turning frequency depends on oxygen, temperature, and moisture conditions in the pile, and may vary from once per day to every 1 to 2 days.

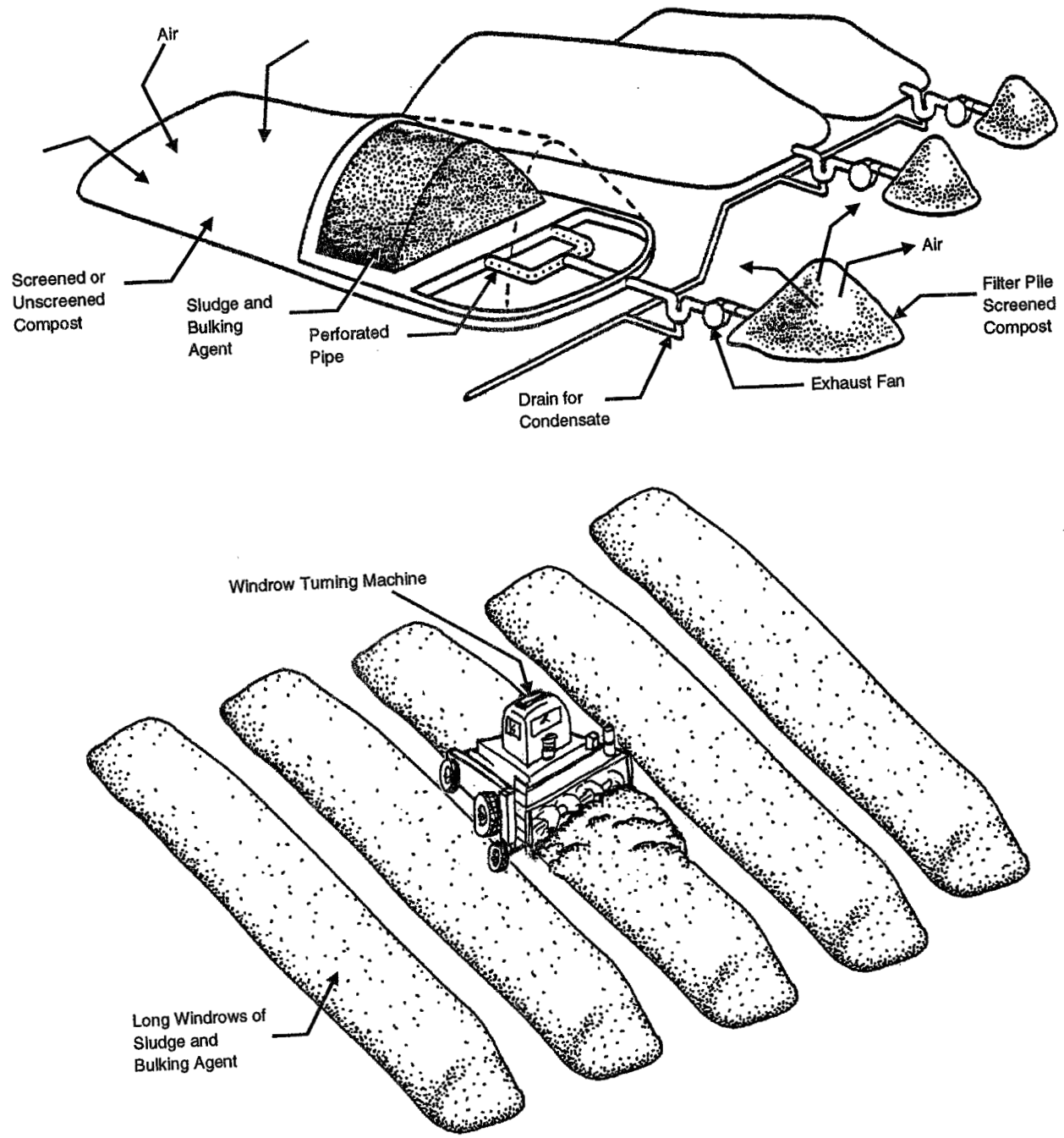

Figure 2-1. Diagrams of aerated static pile (top) and windrow composting processes.

Chapter 3
Regulatory Requirements

Both state and federal regulations govern septage disposal. Because federal regulations set minimum standards, state regulations might be the more stringent of the two. The agencies responsible for administering septage disposal programs at the local level must be familiar with these regulations. For assistance with applicable regulations, contact your state septage coordinator, listed in Appendix B.

3.1 Federal Regulations

Federal regulations applicable to domestic septage are contained in 40 CFR Part 503, "Standards for the Use or Disposal of Sewage Sludge," published in the Federal Register on February 19, 1993. U.S. Environmental Protection Agency (EPA) regulations define domestic septage as "either liquid or solid material removed from a septic tank, cesspool, portable toilet, Type III marine sanitation device, or similar treatment works that receives only domestic sewage." Septage that does not meet this federal definition must be handled and disposed of in accordance with 40 CFR Part 257 (available from EPA or your state septage coordinator).

40 CFR Part 503 simplified the requirements for land application of domestic septage to "nonpublic contact sites." Nonpublic contact sites include agricultural land, forest land, and reclamation sites that the public uses infrequently. The regulations:

- Establish a simplified method of determining septage application rates to the land based on nitrogen loading.
- Define site restrictions depending on whether or not the septage is stabilized by the addition of lime or other alkaline material prior to application.
- Establish alternatives to reduce vector attraction (injection, incorporation, or alkali treatment).
- Establish requirements for recordkeeping, reporting, and certification.
- Prohibit the application of domestic septage to saturated or frozen soil where potential exists for contamination of surface water, or to land within 10 m (33 ft) of wetlands, streams, rivers, or lakes.

Specific aspects of the federal regulations as they pertain to the operation of land application sites are discussed in Chapter 9.

If domestic septage is handled other than by application to a nonpublic contact site, the more complex provisions of 40 CFR Part 503 for sewage sludge then apply. For example, if septage is processed with sewage or sludge at a wastewater treatment plant, the septage effectively becomes part of the sewage sludge. Because septage usually contains low levels of metals and other regulated contaminants, its handling at a wastewater treatment plant will not adversely affect these constituents of the sewage sludge. If septage is treated at an independent septage treatment facility, the sludge generated from such processes is no longer considered septage and thus is subject to the sludge provisions of 40 CFR Part 503. State septage coordinators can provide details on applicable regulations.

3.2 State Regulations

State regulations for septage disposal vary widely. In most cases, states require a hauler to submit disposal plans for approval and provide recommendations on how septage should be disposed of. The state usually issues hauler licenses, although some states delegate this authority to counties or other municipal agencies.

Since promulgation of the federal regulations on land application of septage, many states have reviewed their regulations on this subject. Those states that have regulations less stringent than the federal regulations will likely change state regulations to meet the minimum federal requirements.

Table 3-1 summarizes the regulations of six Midwest states and compares them with EPA regulations for land application of septage. EPA Region 5 staff compiled the table in 1992, prior to promulgation of the current federal regulations. As shown, some state regulations are more stringent than the federal regulations, while others are less so. In such cases, the more stringent regulations establish minimum standards. State septage coordinators listed in Appendix B can provide additional guidance on these regulations.

Table 3-1. Examples of State Septage Regulations (4)

Regulation	EPA	IL	IN	MI	MN	OH	WI
Annual application rate (gal/acre/yr) (based upon 100 lb/acre/yr crop uptake)	38,462	60,000	50,000	60,000	50,000 to 66,700	—	39,210
Recordkeeping							
Retain for (yr)	5	1	3	1	1	1	3
Site location	Y	Y	Y	Y	Y	—	Y
Number of acres	Y	—	Y	Y	—	—	Y
Date/Time of application	Y	—	Y	Y	Y	—	Y
Crop N requirements	Y	—	Y	Y	Y	—	Y
Application rate (gal/yr)	Y	Y	Y	Y	Y	—	Y
Pathogen/Vector Reduction Method							
12 pH/30 min	Y	—	Y	Optional	Optional	—	—
Injection	Y	—	—	Optional	Y	—	Optional
Incorporation	Y	Optional	Optional	Optional	Y	—	Optional
Site Restrictions and Management							
Crop harvesting[a]	—	—	8-12 mo	—	—	2-12 mo	1-24 mo
Truck crops	14 mo	NA	—	—	—	—	—
Root crops	38 mo	NA	—	—	2 yr	—	—
Commodity crops	30 d	—	—	—	30 d	—	—
Turf	1 yr	—	—	—	—	—	—
Access							
Grazing animals	30 d	—	2-9 mo	1 mo	1 mo	—	1 mo
High public access	1 yr	—	18 mo	12 mo	—	—	—
Low public access	30 d	—	—	—	—	—	—
Other							
Depth of ground water/bedrock (ft)	—	4	3	2.5	3	4	3
Site slope (max. %)	—	5	2-9	2-12	2-12	8	2-12
Soil characteristics	—	—	Y	—	Y	Y	Y

[a]Truck crops include those with harvested parts that touch the land surface; commodity crops include other food, feed, and fiber crops that do not touch the land.
NA = Not allowed

Chapter 4
Local Responsibilities

A municipality or sewerage authority is likely to bear responsibility for administering a septage disposal program. In some states, local governments are required to provide a means of septage disposal sufficient to handle septage generated within their boundaries. While responsibilities of municipal or county governments vary widely from state to state, such responsibilities might encompass the following:

- Selecting a septage disposal alternative.
- Ensuring compliance with federal and state regulations.
- Establishing rates for disposal of septage at wastewater treatment plants or independent septage treatment facilities.
- Issuing licenses or permits to haulers for septage pumping and/or disposal.
- Inspecting onsite systems and pumping of septic tanks.
- Establishing local ordinances and rules.
- Administering septage disposal programs and maintaining records.

4.1 Selecting a Septage Disposal Alternative

A municipality is ultimately responsible for selecting a method for septage disposal. Larger communities might enlist the services of an engineering firm to review alternatives and make recommendations.

Table 4-1 provides guidelines for selecting a septage disposal alternative. For small rural communities with adequate land area available, land application is clearly the recommended alternative due to its low cost, simplicity, and environmental benefit. Even for larger, more metropolitan municipalities, land application may be the most cost-effective solution, but land availability is often the major constraint to implementation. Disposal at an existing wastewater treatment plant (WWTP) is relatively simple and economical, but the long-term viability of this option depends on available plant capacity and projected increases in sewage and septage flows. Independent septage treatment facilities are expensive to build and operate, therefore usually the last resort for a municipality.

4.2 Complying With Federal and State Regulations

A local municipal or county government operates a sewage treatment plant that accepts septage or an independent septage treatment facility is responsible for complying with federal and state sludge regulations as described in Chapter 3.

According to 40 CFR Part 503, requirements for the land application of domestic septage are directed toward the applier of the septage (see Chapter 9): an independent septage hauler, a private company under contract to the municipality to provide septage disposal services, or the municipality itself. Even if the local government is not designated as the septage applier, it has the right to monitor and inspect septage disposal operations and should reserve the right to inspect records maintained by the applier in accordance with state and federal regulations. Some states grant authority to the municipality to enforce state regulations on septage disposal. In addition, a local municipality may establish rules and regulations regarding the handling and disposal of septage (see Section 4.6).

4.3 Setting Rates

A local government or sewerage authority is responsible for establishing rates for disposal of septage at publicly owned sewage treatment plants or independent septage treatment facilities. Such rates vary widely, from $40 to $200 per 1,000 gal in one state alone. Occasionally arbitrary, rates are most often set using formulas that estimate the actual cost of treating the septage based on its contribution of the specific wastewater parameters on which the facility National Pollutant Discharge Elimination System (NPDES) permit is based. High rates discourage disposal at the WWTP and encourage illegal dumping and reduced pumpout frequency. Charging less during off-peak seasons may reduce seasonal variability in flows. Disposal fees should have a rational and verifiable basis because haulers must pass on these costs to their customers. One approach that large facilities use is to base fees on local industrial surcharge formulas applied to hauled wastes in addition to administrative, operations, laboratory, and other special costs.

Table 4-1. Guidelines for Selecting a Septage Disposal System

Community Profile	Conditions	Recommended Alternative	Relative Costs: Capital	Relative Costs: O&M	Facility Ownership	Financing Norms
Small, unsewered rural community	Remote land area available with suitable site and soil conditions	Land application of untreated septage	Low	Low	Municipal or private	Fees to users
	Land available but relatively close to neighbors	Land application of alkali-stabilized septage	Low to medium	Low to medium	Municipal or private	Fees to users
	Inadequate land area available with suitable site and soil conditions; WWTP with available capacity within 20 miles	Disposal at WWTP	Low to medium	Medium	Participating municipalities contribute to host facility	Capital improvements shared by municipalities and paid off through tipping fees
Medium-size, partially sewered, semirural or suburban community	Land area available with suitable site and soil conditions but relatively close to neighbors	Land application of alkali-stabilized septage	Low to Medium	Low to Medium	Municipal or private	Fees to users
	Inadequate land area, but available WWTP capacity	Disposal at WWTP	Medium	Medium	Municipal	Capital improvements financed by municipality and paid off through tipping fees
	Inadequate land area; no available WWTP capacity	Disposal at independent septage treatment facility	High	High	One or more municipalities or county	Capital improvements financed by municipality and paid off through tipping fees
Large, sewered municipality with suburban onsite systems	Available WWTP capacity	Disposal at WWTP	Medium	Medium	Municipality	Capital improvements financed by municipality and paid off through tipping fees
	No available WWTP capacity	Independent septage treatment facility	High	High	One or more municipalities or county	Capital improvements financed by municipality and paid off through tipping fees

4.4 Issuing Permits

A local government may require haulers to obtain permits to operate within its jurisdiction. Such permits may cover septic tank pumping, treatment at a sewage treatment plant, land application, or treatment at an independent septage treatment facility. An example of such a permit is shown in Appendix C.

The state issues permits for septage application to land to either the hauler (applier) or the municipality. State requirements for permit application vary widely but may include site inspection by state personnel, an estimate of crop nitrogen requirements by an agronomist, soil tests, and notification of neighboring land owners or residents.

Permits assist the municipality or county in maintaining control of septage haulers and their disposal practices. The cost of the permit should be sufficient to finance an inspection program to assure compliance with local regulations.

4.5 Inspecting Onsite Systems and Pumping of Septic Tanks

Most municipalities rely solely on homeowners to maintain their wastewater disposal systems. Unfortunately, negligence can lead to early failure of the soil absorption system, increasing the cost burden to the owner and potentially threatening the health of the homeowner and neighboring residents.

An alternative approach is for a municipality to conduct inspections of onsite systems, to maintain records of pumping and system rehabilitation or replacement, and to determine whether or not septic tank pumping is required. If pumping is necessary, the owner is required to have his or her tank pumped by a local hauler within a given period, and to provide documentation to the municipality that the tank was pumped in accordance with local requirements. Another approach is for the municipality to assume complete responsibility for inspecting onsite systems and for pumping and disposing of septage.

With both of these approaches, the user is either assessed an annual fee to cover such costs or is billed by the municipality as such tasks are completed.

4.6 Establishing Local Ordinances and Rules

The local government may establish ordinances and rules governing the disposal of septage and other wastes within its jurisdiction. If the municipality or county operates a WWTP, it is required by law to establish an industrial pretreatment program to ensure that industrial wastes receive treatment prior to discharge into the municipal sewer system. Such ordinances specify what materials can or cannot be discharged by a hauler to a sewage treatment plant. These rules are designed to prevent:

- An upset of biological processes by toxic materials.
- Discharge of pollutants in the effluent in excess of that specified in NPDES permits.
- Accumulation of metals or toxic organics in the sludge, which could affect sludge disposal.

Local ordinances and rules may also govern hauler practices, such as good housekeeping, cleanliness of vehicles, and odor control. An example of a local ordinance is shown in Figure 4-1. Rules regarding the treatment and disposal of septage may also be incorporated as conditions to the permit, as shown in Appendix C.

4.7 Administration and Recordkeeping

Administrative and recordkeeping requirements vary depending upon a local government's level of responsibility for septage disposal. For many rural communities where septage is applied to land by haulers, local government control is minimal. In such cases, the community should, at a minimum, maintain copies of all hauler records as required by the state regulations for septage applied within its jurisdiction. If the municipality applies septage to land, it becomes the "applier" and must itself comply with the federal regulation and maintain records of its applications for at least 5 years (see Chapter 9).

If the local government operates a WWTP that accepts septage, the municipality is responsible for establishing and collecting fees, regulating the volume of septage that it accepts, and controlling the types of wastes allowed to be discharged. This may also involve sampling and analysis of loads discharged to the WWTP. Additional information on recordkeeping requirements for plants receiving septage may be found in Section 8.2. The greatest possible administrative and recordkeeping burden is associated with a municipality that assumes total responsibility for inspection and maintenance of onsite systems, including pumping, treating, and disposing of septage.

ARTICLE XIV — DISPOSAL OF HOLDING TANK AND GREASE TRAP WASTES

Section 1401 General Rules

Holding tank or grease trap wastes originating within Hamilton County may be hauled to and discharged into the Department's wastewater treatment system only at those locations, by such methods, and at such times and days as are designated by the Director.

Section 1402 Geographic Restrictions

Holding tank or grease trap wastes originating outside the boundaries of Hamilton County are prohibited from being discharged into the Department's wastewater treatment system without prior approval from the Director.

Section 1403 Permits

Permits for discharge of holding tank or grease trap wastes shall be obtained on application forms furnished by the Director. A separate permit shall be obtained for each tank vehicle upon payment of a fee of one hundred dollars ($100) per vehicle. Each permit shall be displayed at all times on the vehicle for which it was purchased. Permits are transferrable only when the tank vehicle for which the permit was purchased is to be replaced, and then only with the approval of the Director. The term of the permit shall extend from January 1 through December 31 of a calendar year. The permit fee shall not be prorated.

Section 1404 Fees

The costs of the disposal of holding tank or grease trap wastes are to be paid by the discharger. Any person discharging holding tank or grease trap wastes into the wastewater treatment system of the Department shall pay the Department at the specified rate per one thousand (1,000) gallons of tank capacity (or fraction thereof) as a sewage disposal charge.

The Director shall have the authority to, and shall set the specified rate to reflect costs of program elements, including, but not limited to, administration, treatment at rates established by resolution of the Board, laboratory and enforcement. From time to time as the Director deems necessary, the Director shall revise the specified rate to reflect conditions then current.

Section 1405 Discharge Process

No person shall discharge holding tank or grease trap wastes into a wastewater treatment system without a permit except with the prior approval of the Director. Proper reporting as to the source and composition of the waste, such as is determined necessary by the Director, is required. Forms for this purpose will be provided by the Director. Complete cooperation with District personnel supervising the discharge of waste is required. Any other conditions determined to be applicable by the Director must be met. Discharge of wastes shall take place in a neat and orderly fashion. The person discharging said waste shall clean up any spillage and shall leave the discharge site in a state of housekeeping at least as good as the state just before the discharge began.

Section 1406 Discharge Restrictions

No person discharging holding tank or grease trap wastes into the wastewater treatment system of the District shall discharge or cause to be discharged, either directly or indirectly, industrial wastes without the prior approval of the Director. Wastes which violate any of the provisions of Sections 1513, 1514, or subsections A, C, D, E, G, H, or I of Section 1518 of Article XV, Industrial Wastes, are further prohibited from discharge without prior approval of the Director. In any case, wastes are prohibited which cause the wastewater treatment plant to fail to meet effluent limitations set by State or Federal regulatory agencies. The District may inspect any licensed disposal unit at any time. The District will sample the contents of each disposal. Any costs incurred by such sampling and analysis shall be charged to the permittee unless otherwise determined by the Director.

Section 1407 Liabilities

No person discharging holding tank or grease trap wastes shall discharge so as to interfere with the operation of, or cause damage to, a wastewater treatment works, or engage in disorderly or unlawful conduct. Each discharger shall be responsible for the costs of the discharger's operations. Damages shall include fines or other penalties imposed on the District as a result of the discharger's operations.

Section 1408 Indemnity

The discharger covenants and agrees to indemnify and hold the County, City, and Department and all their officers, agents, and employees harmless from any liability whatsoever for any injuries to persons or property arising out of the discharger's operations and defend any suit or legal proceeding brought against the County, City, or Department or any of their officers, principals, agents, or employees on account of loss or damage sustained by any person or property as a result of the discharger's operations, whether or not such injuries or damage be caused by the inherent nature of services performed by the discharger or by the negligence of the discharger or his employees.

Section 1409 Bonding

Each permit application shall be accompanied by a bond, payable to the Board upon default, in an amount depending on the septic hauling capacity of the tank vehicle, or where multiple tank vehicles are operated by a single applicant, in an aggregate amount based upon the fleet capacity, of $10,000 per 1,000 gallons or any part thereof. The full face value of the fleet operator's bond shall apply to each incident. Said bond is intended to insure the performance of the permittee in complying with each and every applicable section of these M.S.D. Rules and Regulations.

Section 1410 Statutory Obligations

Each and every permit issued to a permittee is subject to revocation by the Director upon a finding that the permittee has been convicted of a violation of any Federal, State, or local law or regulation whose subject matter is water quality and/or water pollution control.

Section 1411 Failure to Comply

Failure to comply with any of the above provisions shall be grounds for permit suspension or revocation, fines, and/or forfeiture of bond, such as is determined to be appropriate by the Director in accordance with these Rules and Regulations and other applicable law.

Figure 4-1. Example of proposed local ordinance for septage disposal (courtesy of Cincinnati, OH, MSD).

Part II

Inspectors' and Haulers' Guide

Chapter 5

Inspecting Septic Tanks

5.1 Purpose of Inspection

Septage typically accumulates in a septic tank as shown in Figure 5-1. "Sludge," or heavy solids, grit, and sand, falls to the bottom of the tank. "Scum," or grease, fats, and floatable matter, collects on the surface, forming a mat. Between these zones of sludge and scum is a relatively clear liquid, called "effluent," which normally discharges into a soil absorption system (also referred to as a "leachfield" or "drainfield") each time wastewater is generated from the source.

The rate of accumulation of sludge and scum in a septic tank is highly variable and depends on many factors, including the number of family members, their personal hygiene and eating habits, the dimensions of the tank, the types of appliances used in the home (e.g., garbage disposals), and local climate. In some cases, natural digestion of organic matter significantly slows the accumulation rate, and pumping is required less frequently. If excessive buildup of sludge or scum occurs, however, solids may be carried with the effluent into the soil absorption system, where they accelerate soil clogging. Once soils are clogged, a new soil absorption system may be required, the construction of which is quite costly. Regular inspection and pumping of the septic tank is therefore essential.

Although a septic tank can be inspected to determine whether or not pumping is required, most inspections are performed as part of the pumping service to identify such items as broken baffles and cracked pipes. For older, established communities with septic tank access lids buried 6 to 24 in. (15 to 60 cm) below grade, locating and gaining access to the tanks for inspection can be time-consuming, which limits an inspection program's cost-effectiveness. For newer developments, in which septic tanks are equipped with surface risers that bring access ports flush with or above the existing grade (see Figure 5-1), inspection programs can be simple and therefore cost-effective.

5.2 Determining the Need for Pumping

Most older guidelines suggest that a septic tank serving a single family home should be pumped every 3 to 5 years. Depending on use, however, a modern septic tank may need less frequent pumping; some studies have shown that pumpout frequencies of 7 to 10 years are satisfactory. More frequent inspections, however, are prudent to identify such problems as cracked pipe joints and damaged or clogged baffles. Until local experience dictates otherwise, a pumpout frequency of 4 years is reasonable for most domestic septic tanks. Some states issue operating permits to homeowners that require regular septic tank inspections.

A relatively simple inspection of the septic tank can determine whether or not pumping is required. Inspection consists of measuring the depth of the scum and sludge layers, and assessing the physical condition of the tank and its components.

Scum layer depth can be measured using a stick with a hinged flap as shown in Figure 5-2. The stick is pushed through the scum layer until the flap falls into the horizontal position. The stick is raised until it meets resistance at the bottom of the mat. By marking the stick at the top of the scum layer, the thickness of the mat can be measured. The location of the bottom of the outlet baffle can be measured the same way. Instead of a hinged flap, some inspectors use a vertical stick with a small board attached horizontally at the bottom. If the bottom of the scum mat is less than 3 in. (8 cm) above the bottom of the baffle or outlet tee, or if the anticipated accumulation rate will result in this condition prior to the next inspection, the tank should be scheduled for pumping.

Sludge layer depth can be measured by wrapping a rough cloth strip or toweling around the lower 3 ft (1 m) of a measuring stick, fastening the cloth securely, and lowering the stick to the tank bottom. The measuring stick is lowered through a hole in the scum mat near the outlet baffle or through the outlet baffle itself to prevent scum from attaching to the toweling (see Figure 5-2). After at least 30 sec, the stick is slowly removed. Sludge depth can be estimated by the length of the cloth containing black sludge particles.

Another type of device for measuring sludge depth utilizes a hollow tube with a glass lens at the bottom. A small waterproof light source is attached a set distance from the glass lens, and liquid is allowed to enter the space between the light source and the lens. When the light can no longer be seen through the tube, the sludge layer has been

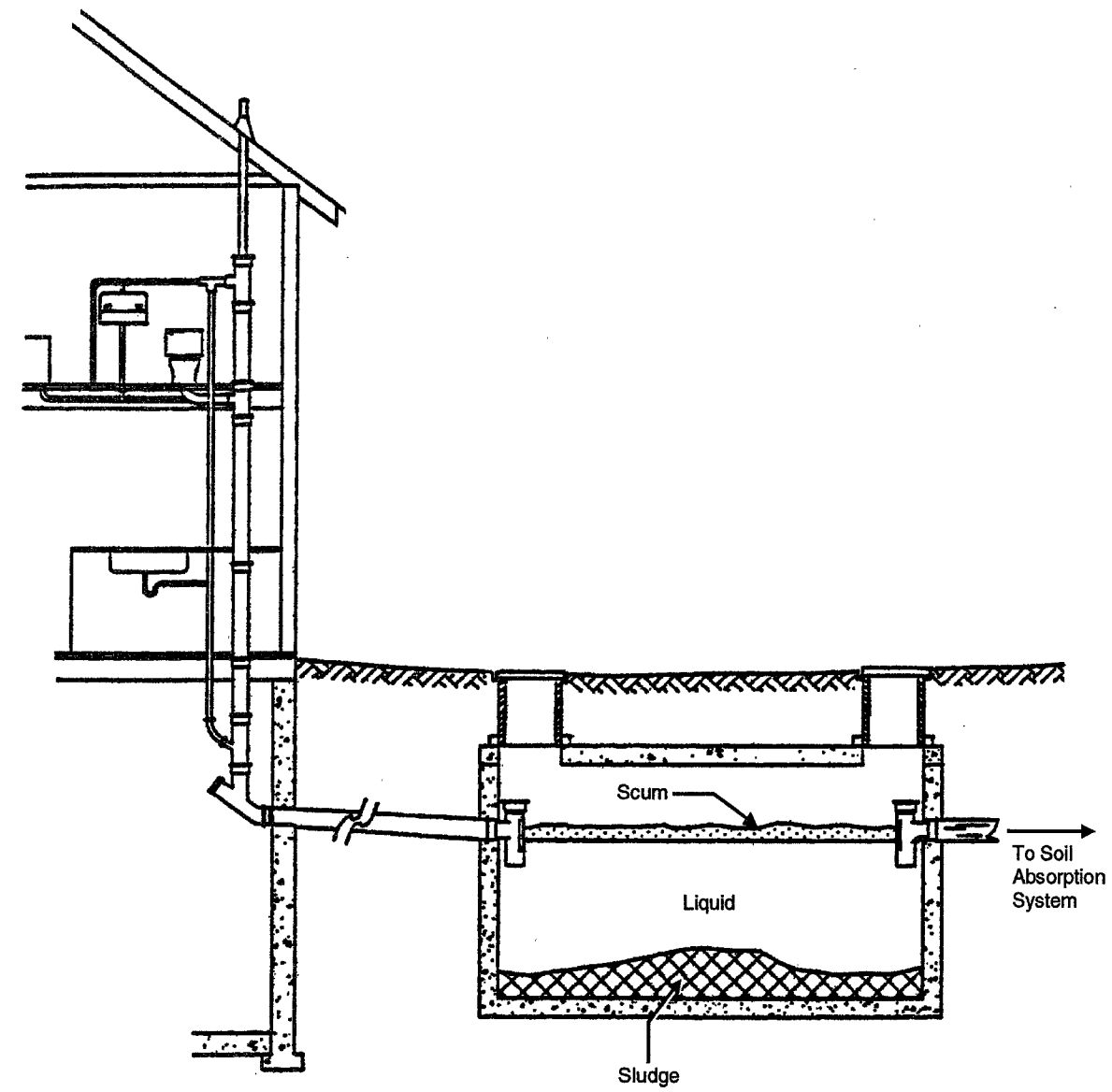

Figure 5-1. Typical residential septic tank.

reached. If the top of the sludge layer is closer than 12 in. to the bottom of the outlet baffle or tee or, more importantly, if the bottom of the scum layer is within 3 in. of the bottom of the outlet baffle or tee, the tank should be pumped.

Most commercial devices available to measure sludge depth are designed for use by operators of sewage treatment plants, and their accuracy for measuring sludge depth in a septic tank should first be demonstrated before purchasing such a device. Most of these instruments employ a light source and sight tube or photoelectric cell; other sludge blanket detectors use a transparent tube in which a "core" of the liquid profile is extracted and the sludge depth is directly measured. Yet another device employs a vertical rod that "floats" on the top of the sludge layer and extends through a hole in the septic tank cover to the surface. When the rod rises to a preset level, a sign becomes visible instructing the user to call a pumper.

Ideally, septic tanks should *initially* be inspected at least once every 2 years. A proper inspection of the septic tank includes observing the condition of the inlet and outlet baffles or tees; broken baffles or tees should be replaced.

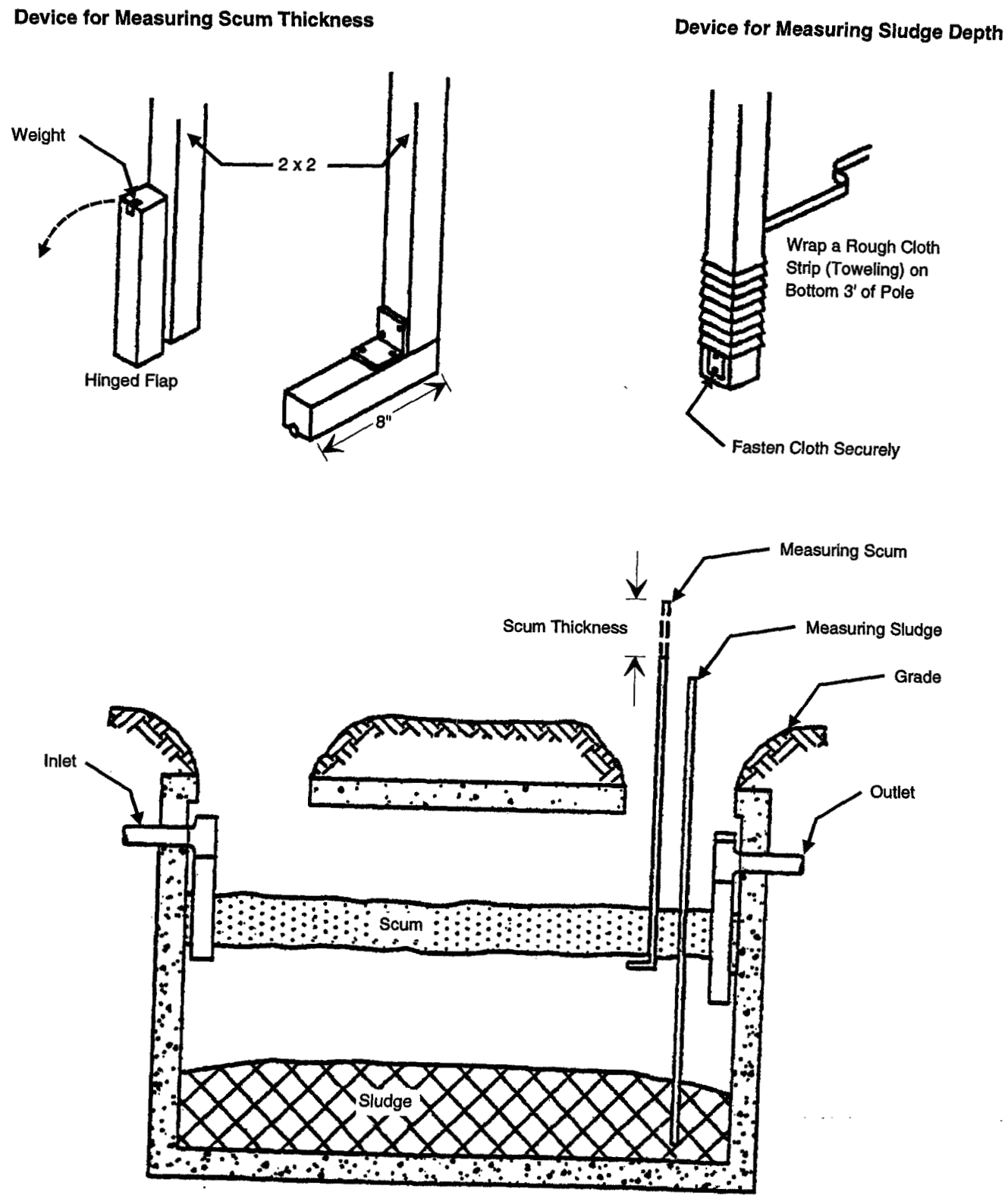

Figure 5-2. Measuring solids accumulation in a septic tank.

Inlet and outlet pipes should be sealed at the tank walls. Sludge and scum accumulation rates can be estimated based on measured levels and the time elapsed since the last pumping. The top level of water should also be compared with the outlet tee invert level (the bottom of the horizontal section) to see whether the tank is leaking.

Inspections of onsite sewage disposal systems generally are not limited to the septic tank. If present, distribution boxes should be inspected to determine if they are level and structurally sound and if solids have accumulated in them. Sludge in the distribution box indicates that solids have already been discharged into the drainfield, and the cause should be investigated and necessary action taken. Water levels in the box should also be noted; if levels are above the invert of the outlet pipe, the drainfield may be malfunctioning, which might require a repair or addition. The area of the drainfield should also be inspected for evidence of surfacing or "daylighting" of septic tank effluent, such as waterlogged soils or ponded liquid, objectionable odors, dead grass from previous ponding episodes, presence of gray or black septic solids, and surface erosion due to runoff from accumulated liquid; these conditions might indicate a need for system improvements.

Chapter 6

Pumping Septic Tanks

6.1 Equipment

Pumper trucks typically range in capacity from 1,000 to 4,000 gal (3,800 to 15,000 L), although multiaxle trucks may have capacities over 6,000 gal (23,000 L). Most states require the business name, address, truck capacity, and other identifying information to be displayed on the side of the truck. Hose racks on the trucks store not only hoses but also devices used for breaking up the scum layer and other equipment.[1]

Pumps are typically either vacuum or centrifugal. Vacuum pumps, the most common system used by septage haulers, have the following advantages: liquid does not flow through the pump, which reduces wear; the pump is less likely to freeze; and the tank contents can be discharged under pressure. Vacuum pumps should be equipped with a water trap to prevent dispersion of aerosols. Because liquid moves through the pump, centrifugal pumps are more likely to clog and wear more readily from grit and debris. Centrifugal pumps are typically open-impeller or recessed-impeller for handling solids. Both types of centrifugal pumps have a maximum suction lift of about 27 ft (8 m). Some truck-mounted tanks are equipped with high-level automatic shutoff controls to prevent overfilling. Pump capacities are typically at least 400 gal/min (1,500 L/min).

Hoses should be of high-vacuum black rubber or synthetic material, with a minimum diameter of 3 in. (8 cm). Hoses should also be capable of being drained and capped to minimize spillage. Haulers typically carry at least 100 ft (30 m) of hose. Discharge valves on the hauler trucks should be drip tight, and a discharge nipple should accommodate a quick-disconnect coupling.

Other equipment includes a device for breaking up the scum layer (e.g., a long-handled fork), shovel, soil probe for locating the septic tank, and other tools to either measure accumulations or perform other tasks in the field. A squeegee and suction wand attachments should be carried to help clean up any spills. Lime should also be available to apply to areas where septage has been spilled.

Mobile septage dewatering systems, originally developed in Europe, are now available in the United States. With these systems, septage is pulled from the septic tank into one compartment on the truck; filtrate is returned to the septic tank. Polymer or lime is added to the septage during transfer to a dewatering tank, where solids are concentrated. A sludge solids content of 15 to 20 percent is reportedly achievable for polymer and lime systems, respectively. Mobile dewatering systems offer:

- Lower transportation costs due to fewer trips to the disposal site.
- Greater truck capacity.
- Lower volumes of material requiring further treatment and disposal.

These advantages are best suited to areas with many septic tanks and long travel distances to the discharge site. Disadvantages include more complex operational requirements and high equipment investment costs.

6.2 Procedures

After the septic tank has been located and the access hatches exposed, the inlet and outlet baffles or tees are examined for such problems as damage, loose connections, and plugging. Broken pipes or baffles should be replaced or repaired. If the liquid level in the tank is higher than the outlet pipe, this may indicate clogging in the outlet pipe or in the drainfield. Next, the scum mat is manually broken up to facilitate pumping. Before this is done, the liquid level in the septic tank first is lowered below the invert of the outlet, which prevents grease and scum from being washed into the drainfield. After the scum mat is broken up, the contents of the tank are removed. Normally, the vacuum/suction hose draws air at a point where 1 to 2 in. (2.5 to 5 cm) of sludge remains over the tank bottom; this material should be left in the tank. Washing down the inside of the tank is unnecessary unless leakage is suspected and the inside must be inspected for cracks. If internal inspection is warranted, fresh air should be continuously blown into the tank for at least 10 min to displace toxic gases or oxygen-deficient air. The interior can then be inspected from the surface with a flashlight.

A septic tank should never be entered without first testing the air for oxygen content, lower explosive limit, and hydrogen sulfide. This is accomplished using electronic "triple gas detectors," available from suppliers of industrial safety equipment. Septic tanks are considered confined spaces and are subject to confined-space entry regulations published by the Occupational Safety and Health Administration (OSHA Standard 1910.146). Anyone entering a septic tank should wear a safety harness connected to an aboveground hoist. Two additional workers should be topside to assist the inspector in the event of problems. Your state or local agency responsible for occupational health and safety should be contacted regarding any additional regulations regarding confined-space entry in their jurisdiction.

In the event of a spill, septage should be immediately cleaned up. Hydrated lime should be sprinkled over the area of the spill, and a squeegee and a suction wand attached to the end of the vacuum hose are useful tools for cleanup. For large spills, a second pumper truck may be necessary; companies with one truck should reach an agreement with another company to assist in emergency spill cleanup.

Addition of any chemical or biochemical agents to the septic tank, such as disinfectants, microorganisms, and enzymes, is discouraged. Such formulations offer little or no benefit and may even be detrimental to the operation of the septic tank and drainfield. For instance, agents that emulsify grease allow its discharge to the soil absorption system, where the emulsion may break at the soil infiltrative surface and cause increased rates of clogging or pass through the soil to ground water. Other agents are formulated of strong alkaline compounds that can pass through a tank and destroy soil structure. The most detrimental formulations contain chlorinated hydrocarbons, which can pass through the tank and soil to contaminate ground water. Fortunately, many commercial products do little to affect performance of either tanks or soil systems. Although no known benefits have been demonstrated to date, the possibility of an effective formulation in the future cannot be ruled out.

[1] "The Pumper," a monthly publication aimed at the liquid waste hauler industry, produces an annual directory of equipment suppliers that is free with a subscription to "The Pumper." Contact Cole Publishing, P.O. Box 220, Three Lakes, WI 54562-0220, telephone (800) 257-7222.

Chapter 7

Regulatory Requirements

Local, state, and federal regulations govern the pumping, transport, and disposal of septage. Septage haulers must be familiar with local codes and state and federal laws as they apply to septage handling; failure to comply with such regulations may result in severe penalties or loss of operating permits.

7.1 Pumping and Transport

State regulations generally address the pumping and transport of septage. For example, state regulations may specify minimum requirements for certain components of the hauler's truck, such as type or capacity of pump, length of hose, discharge valves, cleanliness, and display of company name. Local codes may require a certain size or type of discharge fitting to be compatible with a septage receiving station. Local codes also specify the area from which septage can be accepted, hours of operation, fees, and procedures for disposal at a local treatment and disposal facility. For example, some municipalities or county governments require a manifest for every load of septage that indicates the name and address of the source. Such requirements are generally simple, and local haulers understand them well.

Most states require that haulers be licensed to transport septage within state boundaries. Prospective haulers may have to pass state exams to become licensed. The state or local municipality or sewer authority may require that the hauler secure specified limits of insurance coverage and show proof of motor vehicle insurance and/or liability insurance. In addition, bonds may be required to ensure that the hauler complies with rules and regulations. The amount of the bond may vary depending on the capacity of the truck. In at least one state, a group insurance policy ($1,000,000 liability) is provided through the state pumper organization for an affordable fee.

Federal laws regarding the transportation of septage only apply to septage hauled across state lines. In this case, U.S. Department of Transportation (Federal Highway Administration) regulations apply (49 CFR Part 390). These regulations generally deal with safety issues affecting the vehicle and driver.

7.2 Land Application

U.S. Environmental Protection Agency (EPA) regulations contained in 40 CFR, Subchapter O, Part 503, often referred to as the "503 regulations," provide minimum requirements for the application of *domestic* septage to land used infrequently by the general public. Such sites, referred to as "nonpublic contact sites," include agricultural fields, forest land, and reclamation sites. For septage application to land where public exposure potential is high, or for application of residuals from an independent septage treatment facility, the septage is considered a sludge and is subject to more complex provisions of the 503 regulations. Haulers need not be concerned with such regulations unless they operate an independent facility to treat septage. Haulers who apply septage to land become the "applier" and are subject to EPA and state regulations; these haulers should refer to the information in Chapter 9 regarding regulations for land application of septage.

The 503 regulations set minimum requirements for land application of domestic septage that must be met by all states. States may, however, adopt (or continue to use) regulations that are more stringent than the federal rules. Examples of state regulations regarding septage disposal are provided in Section 3.2. For further guidance, contact your state septage coordinator (see Appendix B).

Local regulations often require that a hauler obtain a permit to discharge septage into a municipal wastewater treatment plant. An example of such a permit is shown in Appendix C.

7.3 Sources of Information

The state septage coordinators listed in Appendix B can assist haulers in understanding regulations regarding septage disposal; in addition, state, regional, and national organizations exist that address regulatory, insurance, and other issues. A partial listing of organizations such as the National Association of Waste Transporters is provided in Appendix A. Haulers are urged to obtain a copy of *Domestic Septage Regulatory Guidance* (EPA/832/B-92/005), available free from the National Center for Environmental Publications and Information, 11029 Kenwood Road, Cincinnati, OH 45242, telephone (513) 569-7980 or fax (513) 891-6685.

Part III

Facility Managers' and Operators' Guide

Chapter 8

Septage Receiving

8.1 Description of a Receiving Station

Septage receiving facilities are a critical component of a septage handling system, particularly if septage is being accepted at a wastewater treatment plant (WWTP) or independent septage treatment plant. Septage receiving facilities may also be part of land application programs where septage haulers discharge to a holding tank prior to septage application to the land. Records of septage sources and volumes and routine sampling of septage loads are essential parts of a comprehensive septage management program. Both can deter septage haulers from discharging incompatible materials, such as industrial wastes, and can assist in determining the source of the load if an upset occurs in a subsequent treatment process. Operators can also prevent the discharge of illegal wastes by observing the odor and appearance of the load.

Septage receiving stations vary in design depending on the volume of septage received, the location of the facility, and the method for processing the septage. Essential elements of a septage receiving station include a concrete pad, an inlet box, pipe, and/or quick-disconnect fitting to receive the septage, a trash rack to remove rags and debris, and wash-down facilities. Other features include holding tanks or systems designed for finer screening and/or grit removal, metering, and odor control. Typical layouts of septage receiving stations are shown in Figure 8-1.

8.2 Recordkeeping and Sampling

A treatment and disposal facility should maintain a log or manifest of every load of septage received. Figure 8-2 is an example of such a form; another example is shown in Appendix C. Normally such forms are provided to haulers, who submit a completed one with each load brought to the receiving facility.

More sophisticated operations may issue special plastic cards to the haulers that operate a gate allowing access to the site. The haulers can either enter the volume and source of septage on a special keypad or manually fill out a manifest such as the one shown in Figure 8-2.

Many sewage treatment plants or independent septage handling operations require that either grab samples of "random" loads be collected and analyzed or that samples of each load be collected, preserved, and stored for a period of one to several days. Both approaches deter discharge of wastes that could cause problems with treatment plant operation, performance, or permit compliance. When every load is sampled and stored, suspect loads can be analyzed "after the fact" if an upset or other problem occurs, while other samples may be discarded without analysis. Many plant operators measure the pH of every septage load prior to discharge, which allows a visual observation of the sample and a check for any "unusual" odors, such as those caused by solvents or degreasers. This practice should not replace collection and storage of samples, however, since potentially hazardous or disruptive wastes may have a neutral pH.

Discharge of loads when a facility is unstaffed is rarely permitted due to the perceived risk of incompatible material being discharged, since an operator is not sampling the waste. A few large European facilities do permit this practice, however, because they are equipped with automatic samplers.

8.3 Operation and Maintenance

Table 8-1 presents a checklist for routine operation and maintenance activities at a typical septage receiving facility.

Receiving Station With Equalization

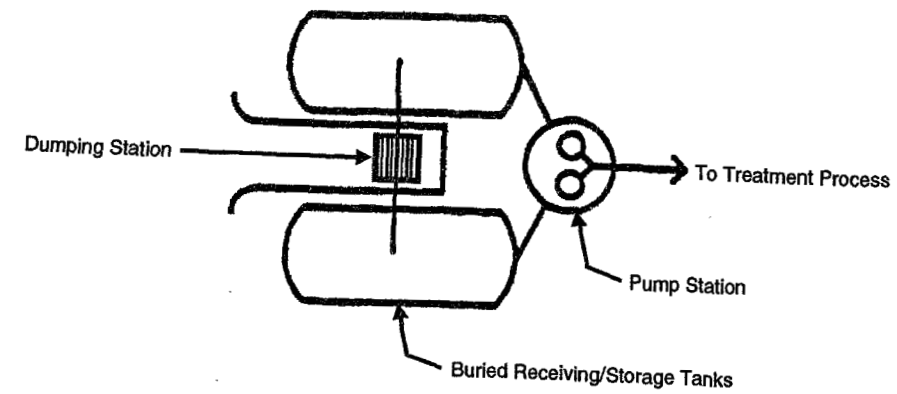

Receiving Station With Equalization and Pretreatment

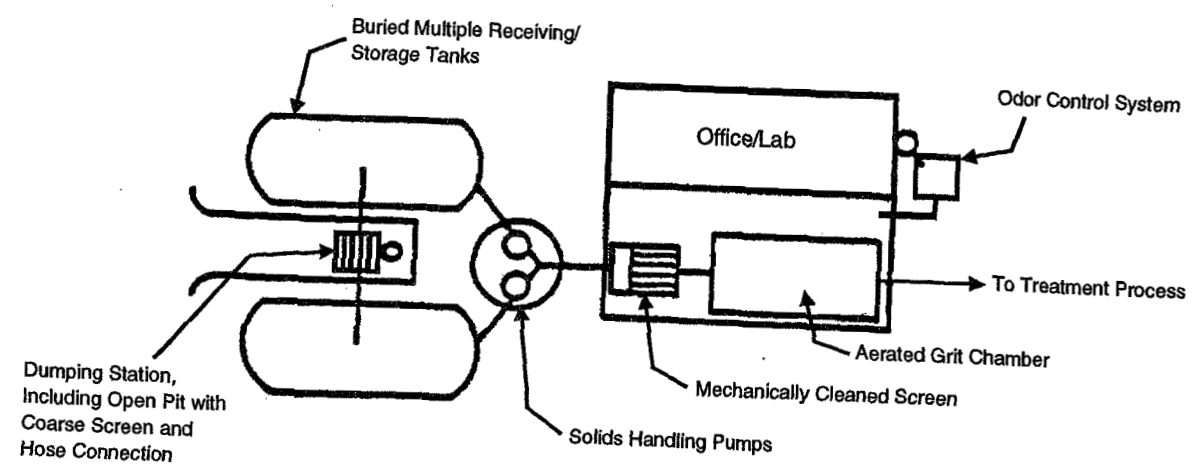

Figure 8-1. Examples of septage receiving station layouts.

SEPTAGE AND SLUDGE MANIFEST **8251**

DATE: _____ TIME OF COLLECTION: _____

SECTION A GENERATOR INFORMATION

MUNICIPALITY SERVICED: _____

GENERATOR NAME: _____

ADDRESS: _____

PHONE NUMBER: _____

SECTION B WASTE CLASSIFICATION AND VOLUMES

SOURCE: 1. Residential 2. Commercial 3. Industrial 4. Restaurant 5. Sewage Treatment Plant 6. Other _____

WASTE TYPE: 1. Septage 2. Holding Tanks 3. Sludge 4. Grease Traps 5. Portable Toilet 6. Other _____

VOLUME: Gallons _____ Cubic Yards _____ Tons _____

SECTION C TRANSPORTER, STORAGE AND DISPOSAL

PCGA License Number of Collection Vehicle: _____

Disposal Facility Utilized: _____

Location of Temporary Storage Tank: _____

Other Disposal Methods: _____ Location: _____

SECTION D CERTIFICATION

As a PCGA Licensed Transporter, I hereby certify that all the above information is true and accurate.

Signature: _____ Date: _____

DRIVER - DO NOT WRITE BELOW THIS LINE

LAB RESULTS: Sample ID Number: _____ ph: _____

Date: _____ Time: _____

Grease/Oils: Yes No Toxicity Indicator: Pass Fail

Petroleum Products: Yes No Solvent Odors: Yes No

Accepted · Rejected

COMMENTS:

Signature of Operator on Duty

White/Generator Pink/Transporter Green/Disposal Canary/PCGA

Figure 8-2. Example of a septage manifest (courtesy of Pike County, PA, General Authority).

Table 8-1. O&M Checklist for Septage Receiving Facilities

Task	Responsibility	Recommended Frequency
☐ Collect and store sample; inspect septage for odor and appearance	Operator	Every load
☐ Wash down pad	Hauler	Every load
☐ Rake screenings from bar rack	Hauler	Every load
☐ Remove screenings and grit	Operator	Dictated by design
☐ Lubricate mechanical screen; use grit removal equipment if applicable	Operator	Per manufacturer's recommendations
☐ Rotate use of septage transfer pumps	Operator	Typically monthly
☐ Repack pump seals and conduct other preventive maintenance	Operator	Per manufacturer's recommendations
☐ Wash down walls of holding tank	Operator	Daily
☐ Check oil levels in pumps and blowers	Operator	Per manufacturer's recommendations
☐ Conduct preventive maintenance on blowers and diffusers	Operator	Per manufacturer's recommendations

Chapter 9
Land Application

Septage may be applied to the following "nonpublic contact sites" with minimal federal regulatory requirements:

- Agricultural fields
- Forest land
- Reclamation sites

Septage application to other sites is equally feasible subject to state and federal regulations.

Key elements of a successful operation and maintenance (O&M) program for a septage land application site include the following:

- Provision of septage receiving and holding facilities to provide operational flexibility (optional).
- Proper septage treatment prior to application as required to meet state regulations (need for treatment depends on requirements of application method).
- Control of septage application rates and conditions in accordance with state rules.
- Proper operation and maintenance of the application equipment.
- Monitoring of septage volumes and characteristics, soil, plants, surface water, and ground water as required by state regulations.
- Odor control.
- Good recordkeeping and retention for at least 5 years.

9.1 Receiving and Storage

Septage storage facilities greatly increase the flexibility of land application operations. Storage facilities may be used during the process of transferring septage to specialized application equipment, during periods when ground is wet or frozen, or during planting or harvesting operations. Because open pits or unlined storage lagoons can be a major source of nuisance odors and ground-water contamination, enclosed holding tanks are recommended, although lined lagoons in isolated areas may be acceptable.

Holding tanks most commonly are simple concrete structures. Epoxy-coated aluminum tanks might also be used. Steel tanks, which have also been used, are subject to rapid corrosion and early failure. If alkali stabilization is practiced at the site, a mixing system is required. Air mixing, the most efficient system, generally requires off-gas collection and treatment to control odors. Biofilters or soil filters are recommended (see Section 12.2). O&M requirements for holding tanks are minimal: daily washdown and periodic tank inspections.

Enclosed storage tanks are subject to corrosion from the release of hydrogen sulfide (H_2S) gas. Because H_2S is toxic, proper confined-space entry procedures must be carefully followed anytime a tank is entered. Key procedures include the following:

- Monitoring H_2S, oxygen, and lower explosive limit.
- Providing forced ventilation of the tank prior to entry.
- Wearing self-contained breathing apparatus, if appropriate.
- Wearing a safety harness.
- Providing two additional people topside with equipment to hoist the tank inspector.

If the holding tank is provided with a mixing system, this should be inspected and cleaned regularly and serviced once per year, or as recommended by the manufacturer. Biofilters or soil filters require moisture control and periodic change of media. Chapter 8 discusses O&M requirements for septage receiving stations.

9.2 Application

Using the simplest application method, a hauler truck applies septage by opening a valve and driving across the land application site. A splash plate or spreader plate improves septage distribution onto the soil surface. The septage should be discharged through a simple screen or basket located on the truck between the outlet pipe and the spreader plate, which prevents nondegradable materials such as plastics and other objectionable trash from being applied to the soil. A simple box screen can be fabricated from expanded metal. Collected trash should be lime stabilized and sent to a sanitary landfill. The septage must be lime stabilized prior to surface application and injected below the surface or plowed into the soil within 6 hr of application to meet federal requirements to reduce vector attraction. This method offers the least flexibility and control from a management perspective. In addition, soil may become compacted, and trucks not designed for offroad use may have difficulty driving on the site. Small, rural land application operations where little environmental or human health risk is likely to occur may find this approach acceptable, however. A transfer or storage tank must be available when sites are inaccessible due to soil, site, or crop conditions.

Another common approach is to use a manure spreader or a special liquid-waste application vehicle that removes screened septage from a holding tank and injects it on or below the soil surface. If the septage is incorporated into the soil by plowing or subsurface injection, lime stabilization may not be required.

A third approach is to pretreat the septage (minimum of screening) during discharge into a holding/mixing tank by adding lime and stabilizing it to pH 12 for 30 min, and then to spray the septage onto the land surface using commercially available sludge application equipment. Lime stabilization reduces odors and potentially eliminates the need to incorporate the septage into the soil; good practice, however, dictates that the septage be incorporated within a reasonable period of time. Guidelines for lime stabilization are included in Section 9.3.

Odors are a concern during and after septage application. A well-managed operation that incorporates lime stabilization, subsurface injection, or surface application at or below agronomic rates, however, creates minimal odor emissions. Guidelines for minimizing odor problems at land application sites are presented in Chapter 12.

O&M requirements for land application of septage vary widely depending on the application technique and the type of equipment used. An equipment O&M checklist is shown in Table 9-1.

Table 9-1. O&M Checklist for Equipment Used in Applying Septage to Land

Task	Recommended Frequency
Spray Irrigation	
☐ Check engine oil level	Before each use
☐ Verify proper connection of hoses	Before each use
☐ Check all shields	Before each use
☐ Observe recommended safety practices	Before and during each use
☐ Grease bearings, lubricate chains, etc.	As recommended by manufacturer
☐ Adjust tension in drive chains	As recommended by manufacturer
☐ Inspect seals, and check oil level in all gearboxes	As recommended by manufacturer
☐ Check tires and hoses	As recommended by manufacturer
☐ Flush pumps and hoses with water	After each use
☐ Drain or air-purge hoses and pump	As necessary to prevent freezing
Subsurface Injection	
☐ Check engine oil, hydraulic fluid, coolant levels, air filter, tire pressure	Daily or before each use
☐ Check and adjust injector depth	Before each use
☐ Check all belts	As recommended by manufacturer
☐ Replace oil, hydraulic fluids, and air filter	As recommended by manufacturer
☐ Grease bearings, steering cylinder, drive shafts, universal joints, and tool bar pivot	As recommended by manufacturer
☐ Clean engine radiator, hydraulic oil cooler, transmission cooler, and air conditioner condenser	As recommended by manufacturer
☐ Inspect brake pads, articulation joints, and battery fluid	As recommended by manufacturer
☐ Observe recommended safety practices	Before and during each use
☐ Flush injectors with water	After each use
☐ Drain tank hoses	As necessary to prevent freezing
Surface Application	
☐ Same as subsurface injection without injector O&M	

The maximum annual volume of domestic septage applied to all but land reclamation sites depends on septage nitrogen content, the amount of nitrogen required by the crop, and the planned yield of the crop. Federal guidelines for estimating application rates based on nitrogen loading are as follows:

Annual application rate (gal/acre/yr) =

$$\frac{\text{Pounds of nitrogen required for the crop and yield (lb/acre/yr)}}{0.0026}$$

Nitrogen requirements of the crop depend on expected yield, soil conditions, and other factors such as temperature, rainfall, and length of growing seasons. Local agricultural extension agents should be contacted to determine the appropriate septage (and nitrogen) application rates, which may vary from 10,000 to 100,000 gal/acre/yr (100 to 1,000 m^3/ha/yr).

The federal regulation for domestic septage application to nonpublic contact sites outlines various restrictions of the crops grown on the site as well as access to the site by the public. The rules are less restrictive if the septage has been alkali stabilized. Table 9-2 summarizes federal crop and public access restrictions. For more detailed information, consult the EPA publication *Domestic Septage Regulatory Guidance* (5) or 40 CFR Part 503. Remember that the state regulation may differ and be more restrictive than that outlined in Table 9-2.

"Vectors" are organisms such as flies, mosquitos, and rodents that can transmit disease. For application of domestic septage to nonpublic contact sites, the federal regulation requires that one of the following three options be implemented to reduce vector attraction:

- Subsurface injection.
- Incorporation (surface application followed by plowing within 6 hr).
- Alkali stabilization (pH of 12 or greater for 30 min prior to application).

By February 19, 1994, the domestic septage applier must certify that the requirements for pathogen and vector attraction reduction are met (see Section 9.4). Refer to *Domestic Septage Regulatory Guidance* (5) or 40 CFR Part 503 for further information.

Other management aspects of land application that the 503 regulations address are avoiding application practices that affect endangered species; occur during flooded, frozen or snow-covered conditions; or occur within 33 ft (10 m) of wetlands or surface waters.

Table 9-2. Federal Crop and Site Restrictions for Land Application of Domestic Septage

Restriction	Untreated Septage	Alkali-Stabilized Septage
Crop		
1. Food crops with harvested parts that touch the septage/soil mixture and are totally aboveground shall not be harvested from the land for 14 months after application of sewage sludge or domestic septage.	X	X
2. Food crops with harvested parts below the surface of the land shall not be harvested for 38 months after application of domestic septage.	X	
3. Food crops with harvested parts below the surface of the land shall not be harvested for 20 months after application of domestic septage when the domestic septage remains on the land surface for 4 months or longer prior to incorporation into the soil.		X
4. Food crops with harvested parts below the surface of the land shall not be harvested for 38 months after application of domestic septage when the domestic septage remains on the land surface for less than 4 months prior to incorporation into the soil.		X
5. Animal feed, fiber, and those food crops whose harvested parts do not touch the soil surface shall not be harvested for 30 days after application of the domestic septage.	X	X
6. Turf grown on land where domestic septage is applied shall not be harvested for 1 year after application of the domestic septage when the harvested turf is placed on either a lawn or land with a high potential for public exposure, unless otherwise specified by the permitting authority.	X	X
Site		
1. Public access to land with a low potential for public exposure shall be restricted for 30 days after application of domestic septage. Examples of restricted access include remoteness, posting with no trespassing signs, and simple fencing.	X	
2. Animals shall not be allowed to graze on the land for 30 days after application of the domestic septage.	X	

9.3 Lime Stabilization

Septage can be stabilized by adding sufficient lime or other alkali to raise the pH to 12 for a minimum of 30 min. Typically, this requires 20 to 25 lb of lime (as CaO or quicklime) per 1,000 gal (2.4 to 3.0 kg per 1,000 L) of septage, although septage characteristics and lime requirements vary widely. Three approaches are recommended for alkali stabilization prior to land application:

- Addition of lime slurry to the truck before septage is pumped into the truck, with additional lime added as necessary after pumping.
- Addition of lime slurry to the septage as it is pumped from the septic tank into the hauler's truck. (Addition of dry lime to a truck during pumping with a vacuum pump system is not recommended; dry lime will be pulled through the liquid and into the vacuum pump, causing damage to the pump.)
- Addition of either lime slurry or dry lime to a holding tank containing septage that has been discharged from a pumper truck.

Compressed air injection through a coarse-bubble diffuser system is the recommended system for mixing the contents of a septage holding tank. Mechanical mixers often become fouled with rags and other debris present in the septage.

Some states prohibit lime stabilization in the hauler's truck and require a separate holding/mixing tank where lime addition and pH can be easily monitored. A separate holding and mixing tank is preferred for alkali stabilization for the following reasons:

- More rapid and uniform mixing can be achieved.
- A separate holding and mixing tank affords more control over conditions for handling and metering the proper quantity of alkali.
- pH monitoring is easier, and more representative samples are likely to be collected due to better mixing.
- Raw septage can be visually inspected.

Many states do allow septage to be lime stabilized within the truck. If the lime is added before or during pumping of the septic tank, 30 min often elapses before the truck reaches the land application site. (At pH 12, 30 min meets the federal requirements for lime stabilization of septage, but state regulations may be more stringent.) To prevent damage to vacuum pumps and to promote better mixing of the lime and septage, addition of lime as a slurry is recommended. The slurry can be added to the truck before pumping the tank, although the amount of lime necessary to reach pH 12 will vary from load to load. Provision should be made to carry additional lime slurry on board the truck to "top off" the dosage.

Table 9-3 presents a procedure for lime-stabilizing septage within the pumper truck. Haulers should experiment with different approaches to determine the best methods for individual situations.

Whether lime is added to the septage hauler truck or to a holding/mixing tank, the pH must be measured to ensure that pH 12 is achieved and maintained for 30 min. After pH 12 is reached, pH should be measured every 15 min using a hand-held or pocket-size pH meter or color-sensitive pH paper that indicates a relatively narrow band of pH in the recommended range (e.g., 10 to 13). A pH meter, available from laboratory supply companies, is

Table 9-3. Procedure for Lime-Stabilizing Septage Within the Pumper Truck

Purpose	To raise the pH of septage to 12 for a minimum of 30 min.
Approach	• Add lime slurry in sufficient quantity *before* pumping the tanks and add additional slurry as needed *after* pumping. • Add lime slurry in sufficient quantity *during* pumping the tanks by vacuuming slurry through small suction line fitted to main suction hose.
Type of lime	• Pulverized quicklime (CaO). • Hydrated lime ($Ca(OH)_2$). (Less quicklime is required than hydrated lime to achieve the same pH, but quicklime is more corrosive and difficult to handle.)
Dosage	Typically 20 to 25 lb quicklime per 1,000 gal of septage (or about 26 to 33 lb of hydrated lime per 1,000 gal).
Slurry	Approximately 80 lb of pulverized quicklime or hydrated lime in 50 gal of water. Mix manually with paddle in a 55-gal drum or in a 200-gal polyethylene tank with electric mixer (preferred). CAUTION: Heat is liberated when quicklime is added to water. Wear rubber gloves, appropriate respirator (for dust), and goggles. Add lime slowly to partially full tank. An emergency eyewash station should be located nearby.
Application rate	Typically 12 to 15 gal quicklime slurry per 1,000 gal of septage (or 15 to 20 gal hydrated lime slurry).
Monitoring	After lime slurry has been mixed with septage, collect sample from top access batch using a polyethylene container fastened to a pole. Measure pH with pH meter. (pH paper can also be used, but it is more cumbersome and less accurate.) If the pH is less than 12, add more slurry. If pH 12 has been reached, record pH and time. Sample again after 15 min. If the pH has dropped below 12, add more lime. *The pH must remain at 12 for at least 30 min.* Sample and record pH prior to applying septage to the land.

preferred due to its convenience. Hand-held meters cost $300 to $500, while pocket-size meters cost $50 to $150. If the pH drops below 12 during the 30-min period after mixing, more lime or other alkali must be added. The pH of the mixture must be maintained at 12 or greater for a full 30 min (longer in some states).

9.4 Monitoring and Recordkeeping

Depending on applicable state regulations, monitoring requirements for land application programs may vary widely with respect to sampling points, sampling frequency, and analytical parameters. Monitoring may include sampling and analysis of septage, soil, ground water, and plant tissue. State regulations must be followed regarding specific requirements for monitoring sites receiving septage.

The federal 503 regulations require that the applier of domestic septage to land begin to monitor and maintain records by July 20, 1993. By February 19, 1994, all other provisions of 40 CFR Part 503 must be met. For a given application site, records must be kept for 5 years. Minimum recordkeeping requirements outlined in the federal regulations are as follows:

- Location of site (street address or latitude and longitude from U.S. Geological Survey maps).
- Number of acres to which septage is applied at each site.
- Nitrogen requirement of crop or vegetation grown at each site.
- The gallons of domestic septage applied to the site during the specified 1-year period.
- Certification that pathogen reduction and vector attraction requirements have been met (see Figure 9-1).
- A description of how pathogen reduction and vector attraction requirements were met for each batch of domestic septage that was land applied.

CERTIFICATION

I certify under penalty of law that the pathogen requirements in *[insert pathogen reduction alternative 1 or 2]* and the vector attraction reduction requirements in *[insert vector reduction alternative 1, 2, or 3]* have/have not *[circle one]* been met. This determination has been made under my direction and supervision in accordance with the system designed to ensure that qualified personnel properly gather and evaluate the information used to determine that the pathogen requirements and the vector attraction reduction requirements have been met. I am aware that there are significant penalties for false certification, including the possibility of fine and imprisonment.

Signed:

_____

(to be signed by the person designated as responsible in the firm that applies domestic septage)

Figure 9-1. Certification of pathogen reduction and vector attraction requirements.

Chapter 10

Treatment at Wastewater Treatment Plants

A wastewater treatment plant (WWTP) is often a convenient and environmentally sound location for septage disposal. Many plants can be modified to receive and treat septage effectively. Septage addition, however, can have a significant impact on plant operations or performance if receiving facilities are not properly designed. Septage handling increases plant operation and maintenance (O&M) costs in proportion to the amount of septage received. The cost of residuals (sludge, grit, screenings) handling and disposal often shows the largest increase. The septage receiving program must be developed recognizing that the National Pollutant Discharge Elimination System (NPDES) permit of the treatment plant prohibits the acceptance of hazardous wastes under the Resource Conservation and Recovery Act (RCRA).

10.1 Estimating Plant Capacity

Determining the ability of a plant to handle septage and estimating the amount of material that can be effectively handled are complex processes. Table 10-1 lists the potential impacts of septage addition to a WWTP.

Figure 10-1 provides a method to estimate the allowable rates of septage addition, assuming that a holding tank is provided and that septage is added to the sewage flow on a semicontinuous basis. This chart takes into account the current loadings to the plant compared with its design loadings. Package plants or other activated sludge processes that do not employ primary treatment are the least amenable to septage handling. A conventional activated sludge plant (with primary clarifier) designed for 2 million gallons per day (mgd) and operating at 50 percent of design capacity should be capable of receiving a septage flow of 1.4 percent of 2 mgd, or 28,000 gal per day. A 2-mgd extended aeration plant operating at 50 percent capacity could receive 0.6 percent of 2 mgd, or 12,000 gal per day. Allowable septage volumes may be reduced due to septage characteristics, treatment plant operations, and sewage flow patterns. A factor of safety should be included in establishing allowable septage volumes.

Table 10-1. Impacts of Septage Addition to a WWTP

• Increased volume of screenings and grit requiring disposal
• Increased odor emissions from headworks
• Scum accumulation in clarifiers
• Increased organic loadings to biological processes
• Potential odor and foaming problems in aerated basins
• Increased loadings to sludge handling processes
• Increased sludge volumes requiring final disposal
• Increased housekeeping requirements

The adverse impacts of septage addition may increase significantly if septage is discharged directly from the hauler truck as a slug load into a small treatment plant. A 1,000-gal load of septage adds an organic load equivalent to 35,000 gal of sewage. If a 1-mgd plant with no primary clarifier received a 1,000 gal load of septage over a 10-min period, the instantaneous organic loading would increase by a factor of four. If that load were to be added over a period of 60 min, the organic loading would increase by only about 60 percent. As a rule of thumb, for unequalized septage addition to a sewage treatment process, the allowable septage addition rates determined using Figure 10-1 should be divided by five.

If septage is added to the solids handling train, allowable loadings must be estimated based on site-specific information and will vary depending on both the existing solids handling processes used at the plant and their design capacity. First, information on current versus design hydraulic and solids loadings must be compiled for those processes that will be employed to cotreat septage-sludge mixtures. Such processes may include thickening, aerobic or anaerobic digestion, dewatering, chemical stabilization, and composting. Then, conservative estimates of the volumes of septage that could be processed without exceeding the design capacity of each unit process can be developed.

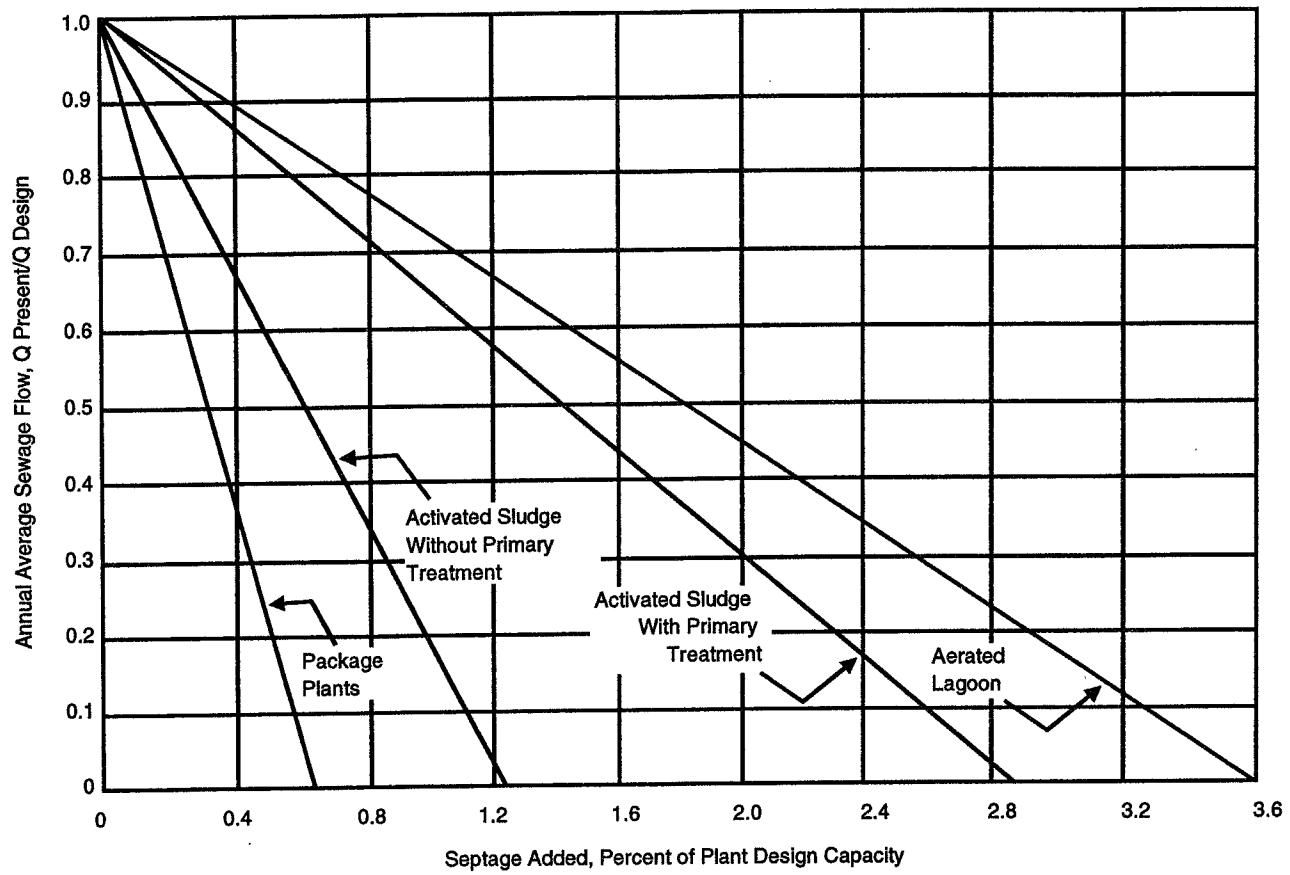

Figure 10-1. Allowable septage loadings to a sewage treatment plant having a septage holding tank (1).

10.2 Additional O&M Requirements

Septage addition to a WWTP will increase O&M requirements, as well as the administrative tasks associated with recordkeeping and billing of haulers, in proportion to the quantity of septage treated. Section 8.1 describes the typical O&M requirements of a septage receiving/holding facility.

Table 10-2 is a checklist of additional O&M requirements for a plant receiving septage. Many of these tasks are a normal part of treatment plant operation and maintenance. The frequency of cleaning and inspection, however, is likely to increase. For example, screenings, grit, scum, and sludge might need more frequent removal from the site, and accumulations from water surfaces and tank walls might also need more frequent removal.

Monitoring requirements at a WWTP are unlikely to increase significantly with septage addition. A well-operated plant already employs a data collection program sufficient to maintain good performance and to demonstrate compliance with discharge permits. During peak septage loadings, aeration basin dissolved oxygen (DO) concentrations should be checked frequently to ensure that adequate levels (usually ≥2.0 mg/L) are present. Other operational data should continue to be collected to assess the impact of septage on overall plant operation and performance. Such data should include sludge production, chemical and power consumption, cake solids from sludge dewatering, and grit and screenings volumes.

Table 10-2. O&M Checklist for Handling Septage at a WWTP

Task	Recommended Frequency
Preliminary Treatment	
☐ Inspect screens for plugging	Twice per shift
☐ Backflush grit transfer lines	After each pumping cycle
☐ Remove grit and screenings from plant	As necessary
☐ Flush grease from tank walls, channels	Daily
Primary Clarification	
☐ Remove any grease and scum from surface	As necessary
☐ Hose down weirs	As necessary
Aeration Basins	
☐ Check dissolved oxygen; maintain minimum of 2 mg/L at peak septage flows	Twice per shift
☐ Hose down any excess foam accumulation	Once per shift
Final Clarifiers	
☐ Inspect for scum accumulation	Twice per shift
Sludge Handling	
☐ Remove grease and scum from gravity thickeners	Daily
☐ Hose down thickener weirs	Daily
☐ Check for increases in biological and/or chemical conditioning requirements	Daily
☐ Check impact on cake solids content	Daily

Chapter 11

Independent Septage Treatment Facilities

The operation and maintenance (O&M) of independent septage treatment facilities can be quite complex, and O&M requirements for a mechanical septage treatment system can equal those of a conventional sewage treatment plant. The purpose of this section is not to provide detailed O&M procedures for such facilities but rather to outline typical O&M requirements for several simple schemes for septage treatment and disposal. Most independent septage treatment plants (and many wastewater plants) have special septage receiving facilities. O&M considerations for such facilities are discussed in Chapter 8.

11.1 Lime Stabilization/ Dewatering

Lime stabilization is one likely component of an overall septage treatment scheme at an independent facility; other major unit processes include settling/dewatering and treating/disposing of liquid and solids fractions. Dewatering options include drying beds or mechanical devices such as screw presses or belt filters. Liquid fraction treatment consists of either biological or physical-chemical systems with discharge to surface water (for which a National Pollutant Discharge Elimination System permit is required), to the land, or to a sewage treatment plant. The solids fraction (sludge) must be managed in accordance with state and federal regulations.

Lime stabilization and sand-bed dewatering present one of the simplest schemes for stabilizing and dewatering septage. Because sand drying beds are labor- and land-intensive, other alternatives for dewatering facilities may be preferable. These include vacuum-assisted drying beds and gravity dewatering systems, which employ manufactured plates (in lieu of sand) and polymer conditioning prior to application. Other dewatering processes such as filter presses and centrifuges are mechanically complex and are most applicable to facilities handling in excess of 10,000 gal per day (0.4 L/sec). Details of all these devices are available elsewhere (see Appendix A).

Table 11-1 is an O&M checklist for the lime stabilization process. Table 11-2 is an O&M checklist for drying beds.

11.2 Mechanical Dewatering/ Composting

Septage is amenable to composting, either as a liquid or as a dewatered cake. Bulking agent requirements for liquid septage composting are substantial, and unless a suitably absorbent bulking agent is available at very low or (preferably) no cost, this approach is unlikely to be economical. Septage can be dewatered, but finding an optimum conditioning agent that consistently performs well despite wide fluctuations in load characteristics is difficult. The liquid fraction resulting from dewatering must be properly

Table 11-1. O&M Checklist for Lime Stabilization of Septage

Task	Recommended Frequency
☐ Monitor pH during lime addition	Continuously until pH exceeds 12; thereafter every 10 min for 30-min minimum
☐ Clean pH probe	After each measurement
☐ Calibrate pH meter	Twice per day
☐ Hose down walls of holding/stabilization tank	Daily
☐ Remove scale and lime dust from feed equipment, if applicable	Daily
☐ Check oil levels in pumps, blowers, and mixers	Per manufacturer's recommendations
☐ Rotate use of septage transfer pumps	Daily
☐ Conduct preventive maintenance on pumps, blowers, diffusers, and mixers	Per manufacturer's recommendations

treated and disposed of. Mechanical dewatering processes include belt filter presses, screw presses, plate-and-frame filter presses, membrane/decant processes (as used in Canada), and centrifuges. As noted earlier, these devices are generally suitable for large quantities of septage. Table 11-3 is a general O&M checklist for mechanical dewatering systems.

Two types of composting operations applicable to composting of septage solids in rural areas are static pile composting and windrow composting. These processes are discussed briefly in Chapter 2. Composting operations are labor-intensive due to requirements to mix septage solids with bulking agent, to monitor pile temperatures, to break down piles and restack them in curing piles, to screen the cured material to recover bulking agent, and to monitor product distribution. Table 11-4 is an O&M checklist for static pile composting of septage. Table 11-5 is an O&M checklist for windrow composting.

Table 11-2. O&M Checklist for Dewatering Using Drying Beds

Task	Recommended Frequency
☐ Apply conditioned septage to depth of 8 in.	As required
☐ Measure percentage of solids in cake	Weekly or as necessary to determine when desired solids content is achieved
☐ Remove dewatered solids	When desired solids content is achieved (e.g., 20 percent)
☐ Rake surface of sand	After removal of dewatered solids
☐ Remove and replace top 4 in. to 6 in. of sand	As necessary to maintain good drainage

Table 11-3. O&M Checklist for Mechanical Dewatering Systems

Task	Recommended Frequency
☐ Make up day tank of conditioning chemicals	Daily
☐ Set dosage of conditioning chemicals	Every batch
☐ Calibrate chemical feed pumps	Weekly
☐ Measure percentage of solids in cake	Every batch
☐ Check quality of filtrate for pH, SS, BOD/COD	Daily, or as required by regulatory agency or treatment plant
☐ Thoroughly clean and flush equipment	Daily
☐ Lubricate moving parts	Per manufacturer's recommendations
☐ Conduct regular preventive maintenance	Per manufacturer's recommendations

Table 11-4. O&M Checklist for Static Pile Composting of Septage Solids

Task	Recommended Frequency
☐ Mix with sufficient bulking agent to achieve initial moisture content of 40 to 45 percent	Every batch
☐ Set air flow at 50 to 85 cfm per dry ton; maintain maximum off-time of 15 min.	Daily
☐ Monitor temperature and oxygen levels at multiple locations in each active pile	Daily
☐ Screen out bulking agent from compost as required, and cure screened compost	Upon breakdown of active pile
☐ Clean up any spilled septage	Daily
☐ Collect excess leachate/condensate	Daily
☐ Conduct routine preventive maintenance on pug mills, blowers, and other mechanical equipment	Per manufacturer's recommendations

Table 11-5. O&M Checklist for Windrow Composting of Septage Solids

Task	Recommended Frequency
☐ Mix with sufficient bulking agent to achieve initial moisture content of 40 to 45 percent	Every batch
☐ Stack in long parallel rows (see Figure 2-1) up to 15 ft wide and 7 ft high	Every batch
☐ Monitor temperature and oxygen levels at multiple locations in windrows	Daily or prior to turning
☐ Turn windrows with special machines	Twice a day for first 5 days, then once a day or as necessary to maintain desired temperature and oxygen levels
☐ Screen out bulking agent from compost as required, and cure screened compost	Upon breakdown of active pile
☐ Clean up any spilled septage	Daily
☐ Collect excess leachate/condensate	Daily
☐ Conduct routine preventive maintenance on pug mills, windrow turning machines, and other mechanical equipment	Per manufacturer's recommendations

Chapter 12
Odor Control

Controlling odors is critical to the success of any waste handling operation. Septage has an offensive odor, and septage processing can release odors and subsequently cause complaints from local residents. Good management practices can often reduce odor emissions; positive steps such as odor containment and treatment, however, may be necessary to control downwind impacts.

Odors evoke an emotional response from residents, and the importance of implementing a good odor control program cannot be overstated. If a septage receiving or treatment facility is being planned, odor impacts must be addressed early in the planning process. Failure to do so may cause mounting local opposition to the project. Once major complaints are lodged against a facility for emitting odors, convincing local residents that the problem will be solved is very difficult, and the project may be doomed politically. Whenever possible, septage handling and treatment facilities should be isolated from residential areas.

12.1 Minimizing Odor Emissions

There are several approaches to minimizing the release of odors from septage. Such approaches generally fall into two categories:

- Reducing the exposure of septage to the atmosphere
- Minimizing turbulence or agitation

Table 12-1 summarizes some "rules-of-thumb" for minimizing odor releases at a septage receiving facility. Although using such techniques is always good practice, alone they may be inadequate to control odors; one of the odor control technologies described in Section 12.2 may be necessary. Table 12-2 provides guidelines for minimizing odor problems at land application sites.

Table 12-1. Guidelines for Minimizing Odor Emissions at a Septage Receiving Facility

- Use quick-disconnect fittings between pumper truck and receiving station to minimize exposure of septage to the atmosphere.
- Provide wash-down facilities to clean up any spills, with drainage into holding tanks.
- Avoid "free fall" of septage by extending receiving pipes below water surface.
- At wastewater treatment plants, introduce septage at slow, controlled rates.
- For a holding tank with mechanical or air mixing, ventilate the tank and direct odorous air to a biofilter or other odor control system.

Table 12-2. Guidelines for Minimizing Odor Problems at Land Application Sites

- Select remote sites if possible. For dedicated sites, plant a vegetative barrier (e.g., trees) at the property border to reduce neighbors' views and change wind patterns.
- Use subsurface injection rather than spray irrigation or surface application.
- Apply well-stabilized material (e.g., lime stabilization).
- Use application rates that are below the maximum rates dictated by site conditions.
- Avoid applying septage when wind conditions favor transport of odors to residential areas or when thermal inversions tend to "trap" odors (early morning or late afternoon).
- Use a covered holding tank and vent odorous air to a biofilter or other odor control system.
- Clean tanks, trucks, and equipment daily.

12.2 Odor Control Technologies

12.2.1 Chemical Addition

Numerous chemicals are available to control odors in wastewater. These chemicals, added directly to the wastewater, are often aimed at controlling hydrogen sulfide, one of the principal odorants in septic wastewater. Chemicals include oxidants (potassium permanganate, hydrogen peroxide, sodium hypochlorite), precipitants (ferrous chloride, ferrous sulfate), and compounds used to prevent the generation of odorous compounds. Such chemicals have been used successfully for odor control in sewage collection systems and for reducing odor emissions from sludge storage and dewatering processes. Their application in controlling septage odors is limited, however, because:

- Septage contains high levels of other odorous compounds such as mercaptans, which are not significantly removed by chemical addition.
- Septage deliveries are intermittent, making control of chemical dosage rates difficult.

12.2.2 Containment and Treatment

For septage handling systems, the best approach to control odors is to cover the sources of odor emissions and to exhaust this air to a suitable control system. If septage holding tanks are mixed, the agitation causes odor to be released from the solution. Septage holding tanks should always be covered. Normally, concrete tanks with precast covers are used; open tanks should be covered with corrosion-resistant fiberglass-reinforced plastic (FRP) or aluminum plate. A corrosion-resistant fan should be employed to exhaust the odorous air at a minimum rate of six air changes per hour (assuming an empty tank).

Odor emissions from wastewater treatment plants (WWTPs) are likely to increase if significant amounts of septage are processed. Aerated channels and grit chambers can cause odorous compounds in the septage to be released to the atmosphere. Covering of such channels and tanks may be necessary. Corrosion-resistant FRP or aluminum panels are recommended, with air exhausted from the head space at a minimum rate of six air changes per hour.

Table 12-3 provides a summary of technologies used for the treatment of odorous air. A brief description of these options is provided below. Some of these alternatives may not be appropriate for small septage handling facilities due to their high capital and operating costs.

Wet scrubbers are an effective, well-demonstrated odor control technology. Two types of wet scrubbers are available:

- Packed tower scrubbers
- Fine mist scrubbers

Both are countercurrent reactors in which the odorous air is contacted with a chemical solution, typically containing sodium hypochlorite and caustic soda. This allows absorption and subsequent oxidation of the odorous compounds.

In packed tower scrubbers, the chemical solution is sprayed over a bed of plastic packing, which is used to promote intimate contact of the chemical solution with the odorous air. The packing is contained in a cylindrical vessel typically constructed of FRP or polyvinyl chloride (PVC). The chemical solution is continuously recirculated, with makeup chemicals added on a controlled basis to maintain the pH and oxidizing capability (ORP) of the solution. Spent chemical solution (with dilution water) is wasted from the system at a rate of 0.5 to 1.0 gal/min per 1,000 ft^3/min of air flow (68 to 135 L/min per 1,000 m^3/min). At WWTPs, the spent chemical solution is typically returned to the headworks. The "cleaned" air is discharged through a demister.

Fine mist scrubbers use a packingless reaction chamber, typically constructed of FRP. Specially designed nozzles, in conjunction with air compressors, create a very fine mist of 10 µm micron droplets of the chemical solution to provide intimate contact with the odorous air, which eliminates the need for packing. Such systems are designed without recirculation of the chemical solution (i.e., the solution only makes one pass through the chamber, after which it is collected and typically discharged back to the headworks). To prevent scaling and plugging of nozzles, makeup water passes through a water softener. Spent chemical solution is discharged at the rate of approximately 0.1 gal/min per 1,000 ft^3/min of gaseous emission (14 L/min per 1,000 m^3/min).

Table 12-3. Summary of Odor Treatment Alternatives

Technique	Application	Cost Factors	Advantages	Disadvantages
Packed tower wet scrubbers	Moderate to high strength odors; medium to large facilities	Moderate capital and O&M cost	Effective and reliable; long track record	Spent chemical must be disposed of; high chemical consumption
Fine mist wet scrubbers	Moderate to high strength odors; medium to large facilities	Higher capital cost than packed towers	Lower chemical consumption	Water softening required for scrubber water; larger scrubber vessel
Activated carbon adsorbers	Low to moderate strength odors; small to large facilities	Cost-effectiveness depends on frequency of carbon replacement or regeneration	Simple; few moving parts	Only applicable for relatively dilute air streams; longevity of carbon difficult to predict
Biofilters	Low to moderate strength odors; small to large facilities	Low capital and O&M costs	Simple; minimal O&M	Design criteria not well established; may not be appropriate for very strong odors
Thermal oxidizers	High strength odors; large facilities	Very high capital and O&M (energy) costs	Effective for odors and volatile organic compounds	Only economical for high-strength, difficult-to-treat air streams at large facilities
Diffusion into activated sludge basins	Low to moderate strength odors; small to large facilities	Economical if existing blowers and diffusers can be used	Simple; low O&M; effective	Blower corrosion possible; may not be appropriate for very strong odors
Odor counteractants	Low to moderate strength odors; small to large facilities	Cost dependent on chemical usage	Low capital cost	Limited odor reduction efficiency (<50%)

Activated carbon adsorbers can also effectively control odor. Their principal application is for low levels of odorous gases, such as for dilute air streams or for polishing high-strength odors pretreated by wet scrubbers or other control device. Two types of carbon are generally used for odor control applications. For air streams containing hydrogen sulfide (H_2S), a caustic-impregnated carbon is often used. Where non-H_2S odors are involved, untreated activated carbon is typically selected. Periodically the carbon must be changed or regenerated due to saturation of the carbon's adsorption sites. For caustic-impregnated carbon, chemical regeneration can be accomplished using a sodium hydroxide solution to desorb the H_2S, although replacement is more common and may be more economical. Nonimpregnated carbon is not usually regenerated on site owing to the cost of thermal regeneration facilities. Small plants either discard spent carbon or ship it to regional regeneration facilities.

Interest in biofilters has increased substantially within the past 10 years due to their simplicity and low capital and operating costs. Biofilters have been commonly used in Europe for many years for odor control applications. The principles of biofilter operation are relatively simple. Odorous air is passed upward through a bed of porous material, which is often composed of a mixture of soil, compost, peat, leaf mulch, sand, wood chips, and other porous materials. Odors are removed through a combination of mechanisms, including absorption, adsorption, and biological oxidation. Figure 12-1 shows a schematic diagram of a biofilter. Although biofilters are generally regarded as very effective, data that document their odor removal efficiency and design criteria are limited. Some problems have been experienced due to excessive drying of the media and short-circuiting of the odorous air stream. Design criteria (e.g., loading rates, media depth) are not well established, and media selection is still somewhat arbitrary. An underdrain system may be necessary to collect condensate from saturated gases. A mist nozzle is often installed in the inlet pipe to humidify drier incoming air to reduce drying of the biofilter media. Typical design criteria for a biofilter are shown in Table 12-4.

Thermal oxidation technologies effectively destroy odorous compounds by subjecting them to temperatures of approximately 1,500°F (815°C). Many variations are available, from direct flame combustion to regenerative thermal oxidation. Such systems are typically used only for very strong, difficult-to-treat odors, such as those from thermal sludge conditioning processes. Because of the high capital cost and high energy consumption, thermal oxidation is not cost-effective for controlling odors from septage handling operations.

Diffusion of odorous air into activated sludge basins is an economical and effective odor control technique if the diffused aeration system is already in place. For septage handling processes, this option is only appropriate where septage is treated at an activated sludge sewage treatment plant. The mechanism of odor reduction is likely to be a combination of absorption, adsorption, and biological oxidation in the mixed liquor. For most odors, odor removal efficiencies in excess of 95 percent can be expected.

Odor counteractants are formulations designed to react with odorous compounds in the vapor phase to render them less detectable or less offensive. A myriad different formulations exist. Few vendors of these chemicals have data documenting their effectiveness for odor reduction. Limited data indicate a maximum reduction of odor detectability of 30 to 40 percent. Odor detectability, measured using an olfactometer and an 8- to 10-member odor panel, refers to the number of dilutions of the odorous sample required before half the odor panel can no longer detect the odor (6). Some formulations are not recommended for odorous air streams containing more than 5 ppm of H_2S. Odor counteractants are attractive to municipalities because the equipment is simple and relatively inexpensive.

Table 12-4. Recommended Design Criteria for a Biofilter

Parameter	Value
Hydraulic loading	≤3 cfm per ft² of bottom bed area
Detention time	≥30 sec through media
Media depth	≥3 ft
Media pH	6 to 8
Pore volume	40 to 50 percent
Moisture content	50 to 60 percent
Media constituents[a]	Equal parts bark mulch, hardwood chips, and screened sludge compost

[a]Constituents of media vary substantially depending on designer; constituents listed are only an example. Other materials that have been used

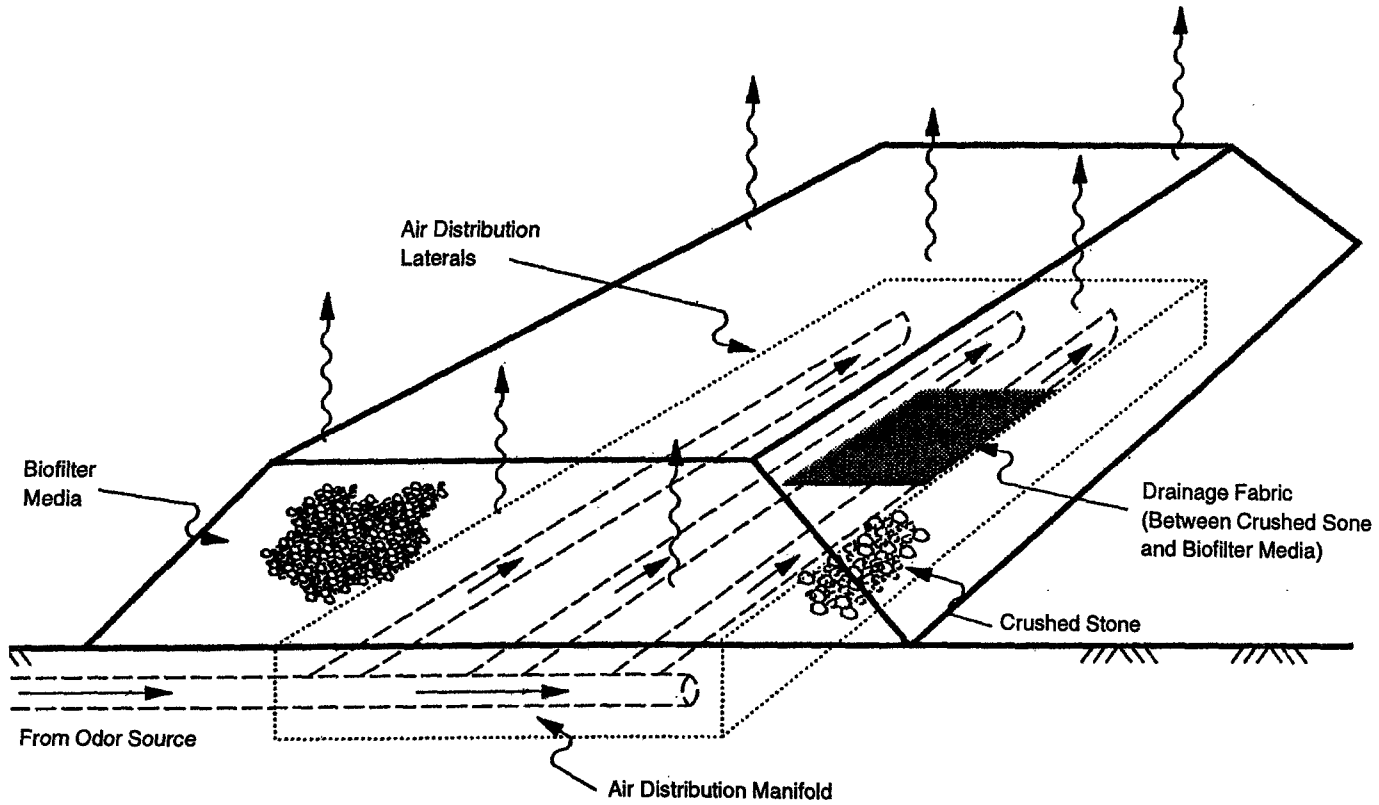

Figure 12-1. Diagram of a biofilter for odor control.

References

When an NTIS number is cited in a reference, that document is available from:

National Technical Information Service
5285 Port Royal Road
Springfield, VA 22161
703-487-4650

1. U.S. EPA. 1984. Handbook: Septage treatment and disposal. EPA/625/6-84/009. Cincinnati, OH.

2. U.S. EPA. 1991. Supplemental manual on the development and implementation of local discharge limitations under the pretreatment program: Residential and commercial toxic pollutant loadings and POTW removal efficiency estimation (NTIS PB93209872). Washington, DC.

3. U.S. EPA. 1975. An alternative septage treatment method: Lime stabilization/sand-bed dewatering. EPA/600/2-75/036 (NTIS PB24581-4BE). Cincinnati, OH.

4. U.S. EPA. 1993. Hauled domestic waste land application of domestic septage: A Region 5 introspective. U.S. EPA Region 5, 77 West Jackson Blvd., Chicago, IL, 60604.

5. U.S. EPA. 1993. Domestic septage regulatory guidance. EPA/832/B-92/005. Washington, DC.

6. American Society for Testing and Materials (ASTM). 1979. Determination of odor and test thresholds by a forced-choice ascending concentration series method of limits. ASTM E679. Philadelphia, PA: ASTM.

Appendix A

Sources of Additional Information

Septage Documents

Technical Sources

1. U.S. EPA. 1993. Hauled domestic waste land application of septage: A Region 5 introspective. U.S. EPA Region 5, 77 West Jackson Blvd., Chicago, IL, 60604.

2. Water Pollution Control Federation (WPCF). 1990. Operation of municipal wastewater treatment plants. Manual of Practice No. 11. Alexandria, VA: WCPF.

3. U.S. EPA. 1987. Process design manual: Dewatering municipal wastewater sludges. EPA/625/1-87/014. Cincinnati, OH.

4. U.S. EPA. 1984. Handbook: Septage treatment and disposal. EPA/625/6-84/009. Cincinnati, OH.

5. U.S. EPA. 1983. Process design manual: Land application of municipal sludge. EPA/625/1-83/016. Cincinnati, OH.

6. U.S. EPA. 1980. Septage management. EPA/600/8-80/032 (NTIS PB81-142481). Cincinnati, OH.

7. U.S. EPA. 1979. Monitoring septage addition to wastewater treatment plants, Volume I. Addition to the liquid stream. EPA/600/2-79/132 (NTIS PB80-143613). Cincinnati, OH.

8. U.S. EPA. 1979. Process design manual: Sludge treatment and disposal. EPA/625/1-79/011 (NTIS PB80-200546). Cincinnati, OH.

9. U.S. EPA. 1978. Pilot-scale evaluations of septage treatment alternatives. EPA/600/2-78/164 (NTIS PB288415/AS). Cincinnati, OH.

10. U.S. EPA. 1975. An alternative septage treatment method: Lime stabilization/sand-bed dewatering. EPA/600/2-75/036 (NTIS PB245816-4BE). Cincinnati, OH.

Regulatory Sources

1. Code of Federal Regulations. 1993. 40 CFR Subchapter O Part 503, Standards for the use or disposal of sewage sludge. Washington, DC (February 19).

2. U.S. EPA. 1993. Domestic septage regulatory guidance. EPA/832/B-92/005. Washington, DC.

3. U.S. EPA. 1992. Environmental regulations and technology: Control of pathogens and vector attraction in sewage sludge. EPA/625/R-92/013. Cincinnati, OH.

4. U.S. EPA. 1989. Environmental regulations and technology: Control of pathogens in municipal wastewater sludge. EPA/625/10-89/006. Cincinnati, OH.

Planning and Management Sources

1. U.S. EPA. 1982. Management of onsite and small community wastewater systems. EPA/600/8-82/030. Cincinnati, OH.

2. U.S. EPA. 1980. Planning wastewater management facilities for small communities. EPA/600/8-80/030. Cincinnati, OH.

Obtaining Documents

The EPA documents listed above, as well as other pertinent information, are generally available from one or more of the following sources:

1. National Center for Environmental Publications and Information, 11029 Kenwood Rd., Cincinnati, OH 45242; telephone (513) 569-7980 or fax (513) 891-6685.

2. National Technical Information Service, 5285 Port Royal Rd., Springfield, VA 22161; telephone (800) 553-6847 or (703) 487-4650.

3. Center for Environmental Research Information, 26 W. Martin Luther King Dr., Cincinnati, OH 45268; telephone (513) 569-7562 or fax (513) 569-7566.

4. National Small Flows Clearinghouse, West Virginia University, P.O. Box 6064, Morgantown, WV 26506-6064; telephone (800) 624-8301.

Hauler Organizations

National

National Association of Waste Transporters, Inc., P.O. Box 731, Sayville, NY 11782-0731. Kenneth Daly. Telephone 1-800-236-NAWT.

State

Alabama

Alabama Septic Tank Association (ASTA), P.O. Box 39, Crane Hill, AL 35053. Tommy Shaddix, President. Telephone (205) 747-4097 or (205) 747-4097.

Arizona

Arizona Liquid Waste Transporters Association, American Pumping, P.O. Box 83148, Phoenix, AZ 85071. Perry French, NAWT Director. Telephone (602) 252-8111.

California

San Diego County Sewage Haulers Association, P.O. Box 2576, Vista, CA 92085. Scott Ferguson, NAWT Director. Telephone (619) 724-8111.

California Liquid & Hazards Management Association, 3972 N. Waterman Ave., Suite 106, San Bernardino, CA 92404.

Delaware

Delaware Sanitary Pumpers Association, Route 3, Box 585, Wyoming, DE 19934. Hollis Warren. Telephone (302) 284-9130.

District of Columbia

Hazardous Waste Service Association, 1333 N. Hampshire Ave. NW., Suite 1100, Washington, DC 20036.

Florida

National Onsite Wastewater Recycling Association, Inc. (NOWRA), P.O. Box 525, Lakeland, FL 33802. Telephone (813) 644-3228.

Illinois

Illinois On-Site Wastewater Association, P.O. Box 205, Winfield, IL. Bruce Sims, NAWT Director. Telephone (708) 668-3370. Fax (708) 668-1351.

Indiana

Indiana Pumpers Association, Inc., P.O. Box 423, 55910 Currant Rd., Mishawaka, IN 46544-0423. Diana J. Miller, NAWT Director. Telephone (219) 294-3133.

Maine

Maine Association of Wastewater Transporters, P.O. Box 155, Minot, ME 04258-0155. George "Buster" Downing, NAWT Director. Telephone (207) 782-4508.

Maryland

Maryland Sanitary Pumpers Association, 211C 24th St., Westminster, MD 21157. John S. Cullop Jr., NAWT Director. Telephone (301) 898-0686.

Massachusetts

Massachusetts Association of Sewerage Pumping Contractors, P.O. Box 498, Wakefield, MA 01880-0498. Richard A. Mottolo, President. Telephone (617) 245-7576.

Massachusetts Septic Association/Allan Rodenhiser, Electric Sewer Cleaning Company, P.O. Box 269, Alliston, MA 02134. Telephone (617) 782-1550.

Michigan

Michigan Septic Tank Association, P.O. Box 127, RR #2, Bark River, MI 49807. Carl Stenberg. Telephone (906) 466-9908.

Michigan Septic Association, 5623 N. M-13, Tinconning, MI 48650. Bob Pierson. Telephone (517) 879-2691.

Minnesota

Minnesota On-Site Treatment Contractors Association, Inc., P.O. Box 125, Nisswa, MN 56468-0125. Larry Fyle, President. Telephone (218) 963-2225.

New Hampshire

New Hampshire Association of Septage Haulers, 106 Horsehill Rd., Concord, NH 03303. Ray Barton, President. Telephone (603) 753-8444.

New Hampshire Septage Hauler Assoc., 338 Quaker St., Weare, NH 03281. Telephone (603) 529-7954.

New York

New York State Contractors and Transporters of Septage, Inc. (NYCATS), P.O. Box 29, Smithtown, NY 11787. Richard F. Lange, President. Telephone (516) 361-8500.

Long Island Liquid Waste Association (LILWA), P.O. Box 29, Smithtown, NY 11787. Richard Lange, NAWT Director. Telephone (516) 361-8500.

Mid-Hudson Septic Haulers Association, 269-271 Cream St., Poughkeepsie, NY 12601. Theodore Losee, NAWT Director. Telephone (914) 452-1123.

North Dakota

Great Plains Liquid WP Assoc., R.S. Box 34, Dickinson, ND 58601. Val Stockert.

Ohio

Ohio Waste Haulers Association, P.O. Box 277, Huntsburg, OH 44046-0277. Tim Frank, NAWT Director. Telephone (216) 636-5111.

Pennsylvania

Pennsylvania Septage Management Association, RD #3, Box 3231, Moscow, PA 18444. Joseph Macialek, Executive Secretary. Telephone (717) 842-7300.

Pennsylvania Portable Sanitation Association, P.O. Box 178, Bellefonte, PA 16825. Richard L. Macialek. Telephone (814) 355-2185.

Texas

Southeast Texas Liquid Waste Haulers Association, P.O. Box 488, Pearland, TX 77588. Clarence F. Zabawa, Sr., NAWT Director. Telephone (713) 489-9895.

Wisconsin

Wisconsin Liquid Waste Carriers Association, 444 Kettle Morraine Dr., Eagle, WI 53119. Don Murphy. Telephone (414) 537-4988.

Appendix B

List of State and EPA Regional Septage Coordinators

State Septage Coordinators

Alabama

Sam Robertson
Environmental Program Management Division
Department of Health
434 Monroe St.
Montgomery, AL 36130
(205) 242-5007

Alaska

Deena Henkins
Wastewater and Water Treatment Section
Division of Environmental Quality
Department of Environmental Conservation
410 Willoughby Ave.
Juneau, AK 99801
(907) 465-5312

Arizona

Krista Gooch
Office of Waste Programs, Solid Waste Unit
Department of Environmental Quality
2501 North 4th St., Suite 14
Flagstaff, AZ 86004
(602) 773-9285

Arkansas

Carl Graves
Environmental Health Protection
Bureau of Environmental Health Services
Department of Health
State Health Bldg.
4815 West Markham St.
Little Rock, AR 72205
(501) 661-2171

California

Archie H. Matthews, Chief
Regulatory Section
Division of Water Quality
State Water Resources Control Board
P.O. Box 944213
Sacramento, CA 94244-2130
(916) 657-0532

Colorado

Phil Hegeman
Municipal Sludge Management Program
Water Quality Control Division
Department of Health
4300 Cherry Creek Dr. S.
Glendale, CO 80222-1530
(303) 692-3598

Connecticut

Warren Herzig
Water Management Bureau
Department of Environmental Protection
State Office Bldg.
165 Capital Ave.
Hartford, CT 06106
(203) 566-2154/1932

Delaware

Jenny McDermott
Dept of Natural Resources & Environmental Control
Division of Water Resources
Waste Utilization Program
89 Kings Highway
P.O. Box 1401
Dover, DE 19903
(302) 739-5731

District of Columbia

Dr. Mohfin R. Siddique
DCRA Environmental Regulation Administration
Water Resources Management Division
2100 Martin Luther King Jr. Ave. SE., Suite 203
Washington, DC 20020
(202) 404-1120

Florida

Julie Gissendanner
Bureau of Water Facilities Planning and Regulation
Domestic Wastewater Section
Department of Environmental Regulation
Twin Towers Office Bldg.
2600 Blairston Rd.
Tallahassee, FL 32399-2400
(904) 488-4524

Florida (cont.)

Dale Holcomb
HRS Onsite Sewage Program
Department of Health and Rehabilitative Services
1317 Winewood Blvd.
Tallahassee, FL 32399-0700
(904) 488-4070

Georgia

Ide Oke
Department of Environmental Resources
Division of Public Health
878 Peachtree St., NE., Suite 100
Atlanta, GA 30309

Hawaii

Dennis Tuland
Construction Grants Program
Wastewater Branch Department of Health
5 Waterfront Plaza, Suite 250-D
500 Ala Moana Blvd.
Honolulu, HI 96813
(808) 586-4294

Idaho

Barry Burnell
Division of Environmental Quality
Department of Health and Welfare
1410 North Hilton
Boise, ID 83706
(208) 334-5860

Indiana

Mike Hoover
Permits Section
Office of Water Management
Department of Environmental Management
105 South Meridian
Indianapolis, IN 46206
(317) 232-8760

Illinois

Doug Ebelherr
Private Sewage Disposal Program
Department of Public Health
535 West Jefferson St., 3rd Floor
Springfield, IL 62761
(217) 782-5830

Iowa

Darrell McAllister
Surface and Groundwater Protection Bureau
Department of Natural Resources
Wallace Bldg.
900 East Grand Ave.
Des Moines, IA 50309
(515) 281-8869

Kansas

Rodney Geisler and Julie Greene
Department of Health and Environment
Forbes Field, Bldg. 740
Topeka KA 66620
(913) 296-5527

Kentucky

Ken Wade
Environmental Sanitation Branch
Division of Local Health
Cabinet for Human Resources
275 East Main St.
Frankfurt, KY 40621
(502) 564-4856

Louisiana

Bijan Sharafkhani
Solid Waste Division
Department of Environmental Quality
P.O. Box 82178
Baton Rouge, LA 70884-2178

Maine

Jim Pollock, Environmental Specialist
Department of Environmental Protection
Bureau of Hazardous Materials & Solid Waste Control
Division of Solid Waste Facility Regulation
State House Station 17
Augusta, ME 04333
(207) 287-2651

Maryland

Dr. Simin Tirgari, Chief
Sewage Sludge Division
Hazardous and Solid Waste Management Administration
Department of the Environment
2500 Broening Highway
Baltimore, MD 21224
(301) 631-3318

Massachusetts

Rick Dunn
Department of Environmental Protection
Division of Water Pollution Control
1 Winter St.
Boston, MA 02108
(617) 556-1130

Michigan

Andy Kock
Waste Management Division
Department of Natural Resources
P.O. Box 30241
Lansing, MI 48909
(517) 373-9523

Minnesota

Mark Wespetal and David Nelson
Non-Point Source Section
Division of Water Quality
Pollution Control Agency
520 Lafayette Rd.
Saint Paul, MN 55155
(612) 296-9322

Mississippi

Glen Odom
Bureau of Pollution Control
P.O. Box 10385
Jackson, MS 39289-0385
(601) 961-5159

Ralph Turnbo
General Sanitation Branch
Department of Health
P.O. Box 1700
Jackson, MS 39215-1700
(601) 960-7690

Missouri

Ken Arnold, Unit Chief of Land Application
Water Pollution Control Program
Department of Natural Resources
P.O. Box 176
Jefferson City, MO 65102
(314) 751-9155

Montana

Scott Anderson
Water Quality Bureau
Department of Health & Environmental Sciences
Cogswill Bldg., Rm. A206
Helena, MT 59620
(405) 444-2406

Nebraska

Steve Goans
Water Quality Division
Department of Environmental Quality
P.O. Box 98922-8922
Statehouse Station
Lincoln, NE 68509-8922
(402) 471-4220

New Hampshire

Selina Makofsky
Water Supply and Pollution Control Division
Sludge and Septage Management
Department of Environmental Services
6 Hazen Dr.
P.O. Box 95
Concord, NH 03301
(603) 271-2457

New Jersey

Mary Jo M. Aiello
Bureau of Pretreatment and Residuals
Department of Environmental Protection CN-029
Trenton, NJ 08625
(609) 633-3823

New Mexico

Arun T. Dhawan
Construction Program Bureau
Wastewater Construction Programs
Environmental Department
1190 St. Francis Dr.
P.O. Box 26110
Santa Fe, NM 87502-6110
(505) 827-2808

Nevada

Jim Williams
Bureau of Water Pollution Control
Department of Conservation and Natural Resources
Division of Environmental Protection
Capitol Complex
333 West Nye Ln.
Carson City, NV 89710
(702) 687-5870

New York

Edwin Dassatti
Residuals Management Section
Bureau of Resource Recovery, Division of Solid Waste
Department of Environmental Conservation
50 Wolf Rd.
Albany, NY 12233-4013
(518) 457-7336

North Carolina

Ted Lyon
Dept of Environment, Health and Natural Resources
Division of Solid Waste Management
Solid Waste Section
Septage Management Branch
P.O. Box 27687
Raleigh, NC 27611
(919) 733-0692

North Dakota

Jeff Hauge
Division of Municipal Facilities
Department of Health
1200 Missouri Ave.
Bismark, ND 58505
(701) 221-5210

Ohio

Scott Golden
Private Water System and
Household Sewage Disposal Unit
Department of Health
246 North High St.
P.O. Box 118
Columbus, OH 43266-0118
(614) 466-1390

Oklahoma

Dan Hodges
Water Quality Services
Department of Health
1000 N.E. 10th St.
Oklahoma City, OK 73117-1299
(405) 271-5205

Oregon

Mark Ronayne
Department of Environmental Quality
Water Quality Division, Municipal Waste Section
811 S. W. 6th Ave.
Portland, OR 97204
(503) 229-6442

Pennsylvania

Thomas Woy
Department of Environmental Resources
Municipal and Residual Waste Management Administration
Bureau of Waste Management
P.O. Box 2063
Harrisburg, PA 17120
(717) 787-1749

Rhode Island

David Chopy
Division of Water Resources
Department of Environmental Management
291 Promenade St.
Providence, RI 02908-5657
(401) 277-3961

South Carolina

Dick Hatfield, Director
On-Site Wastewater Management Division
Bureau of Environmental Health
Department of Health and Environmental Control
2600 Bull St.
Columbia, SC 29201
(803) 935-7835

South Dakota

Bill Gyer
Division of Environmental Regulation
Department of Environment and Natural Resources
523 East Capital St.
Pierre, SD 57501-3181
(605) 773-3351

Tennessee

Steve Morris
Division of Groundwater Protection
Department of Environment and Conservation
LNC Tower, 10th Fl.
401 Church St.
Nashville TN 37243-1533
(615) 532-0774

Texas

Paul Curtis
Watershed Management
Municipal Permits
Texas Water Commission
P.O. Box 13087
Austin, TX 78711-3087
(512) 463-8201

Utah

Kiran Bhayani
Division of Water Quality
Department of Environmental Quality
P.O. Box 144870
Salt Lake City, UT 84114-4870
(801) 538-6146

Vermont
George Desch, Chief
Agency of Natural Resources
Department of Environmental Conservation
Division of Solid Waste Management, Residuals Section
103 South Main St.
Waterbury, VT 05671-0407
(803) 244-7831

Virginia
Robert W. Hicks
Office of Environmental Health Services
Department of Health
Main St. Station, Suite 117
P.O. Box 2448
Richmond, VA 23218
(804) 786-3559

Washington
Kyle Dorsey
Department of Ecology
P.O. Box 47600
Mailstop 7600
Olympia, WA 98504-7600
(206) 459-6307

West Virgina
Ron Forren, Director
Public Health Sanitation Division
Office of Environmental Health Services
815 Quarrier St., Suite 418
Charleston, WV 25305
(304) 558-2981

Wisconsin
Roger Steindorf
Bureau of Wastewater Management
Division of Environmental Quality
101 South Webster St. GEF II
P.O. Box 7921
Madison, WI 53707-7921
(608) 266-8907

Wyoming
Larry Robinson
Water Quality Division
Wyoming Department of Environmental Quality
Herschler Bldg., 4th Fl. W.
122 West 25th St.
Cheyenne, WY, 82002
(307) 777-7075

Puerto Rico
Victor Matta, Section Chief
Non-Hazardous Solid Waste Section
Land Pollution Control Area
Environmental Quality Board
P.O. Box 11488
Santurce, Puerto Rico 00910
(809) 767-8124

Virgin Islands
Leonard G. Reed, Jr., Assistant Director
Division of Environmental Protection
Department of Planning and Natural Resources
45 A. Nisky Center, Suite 231
Saint Thomas, VI 00802
(809) 774-5416

EPA Regional Septage Coordinators

Region 1
(CT, ME, MA NH, RI, VT)
Thelma Hamilton
Water Management Division
Wastewater Treatment Management Branch
U.S. EPA Region 1
John F. Kennedy Federal Bldg.
Mail Stop WMC
Boston, MA 02203
(617) 565-3569

Region 2
(NY, NJ, Puerto Rico, Virgin Islands)
Alia Ronfaeal
NY-NJ Municipal Programs Branch
Water Management Division
26 Federal Plaza, Room 837
New York, NY 10278
(212) 264-8663

Region 3
(DE, DC, MD, PA, VA, WV)
Ann Carkhuff
Permits Enforcement Branch
Program Development Section
U.S. EPA Region 3
Mail Stop 3WM55
841 Chestnut St.
Philadelphia, PA 19107
(215) 597-9406

Region 4
(AL, FL, GA, KY, MS, NC, SC, TN)
Vince Miller
Permits Section
Water Permits and Enforcement Branch, OR,
Ben Chen
Technical Transfer Unit
Municipal Facilities Branch
Water Management Division
U.S. EPA Region 4
354 Courtland St., NE.
Atlanta, GA 30365
(404) 347-2319

Region 5
(IL, IN, MI, MN, OH, WI)
John Colletti
NPDES Permit Section—Water Quality Branch
Water Management Division
U.S. EPA Region 5
WQP-16J
77 West Jackson Blvd.
Chicago, IL 60604
(312) 886-6106

Region 6
(AR, LA, NM, OK, TX)
Stephanie Kordzei
Technical Section
Muncipal Facilities Branch—Water Division
U.S. EPA Region 6
1445 Ross Ave.
Dallas, TX 75202
(214) 655-7164

Region 7

(IA, KS, NE, MO)
Dr. Rao Surampalli or John Dunn
Water Programs—Water Management Division
U.S. EPA Region 7
726 Minnesota Ave.
Kansas City, KA 66101
(913) 551-7553

Region 8

(CO, MT, ND, SD, UT, WY)
Robert Brobst
NPDES Permit Section
Water Management Division
U.S. EPA Region 8
Mail Stop 8WM-C
999 18th St.
Denver, CO 80202-2466
(303) 293-1627

Region 9

(AZ, CA, HI, NV, American Samoa, Guam)
Lauren Fondahl
Pretreatment Program and Compliance Section
Permits and Compliance Branch
Water Management Division
U.S. EPA Region 9
Mail Stop W-5-2
75 Hawthorne St.
San Francisco, CA 94105
(415) 744-1909

Region 10

(AK, ID, OR, WA)
Dick Hetherington
Water Permits Section
Wastewater Management and Enforcement Branch
Water Division
Mail Stop WD134
U.S. EPA Region 10
1200 6th Ave.
Seattle, WA 98101
(206) 553-1941

Appendix C

Example of Local Permit for Septage Disposal

(Courtesy of Derry, PA, Township Municipal Authority)

HAULED WASTEWATER DISCHARGE PERMIT

DERRY TOWNSHIP MUNICIPAL AUTHORITY
WASTEWATER TREATMENT FACILITY

Permit ID Number: **HWDP#999**

In accordance with all the terms and conditions of the current Derry Township Municipal Authority Rates, Rules and Regulations, the special Permit conditions accompaning this Permit, and all applicable Federal or State Laws or regulations, permission is hereby granted to:

NAME of PERMITTEE:_____

ADDRESS:_____

CITY, STATE & ZIP:_____

For the disposal of domestic septic tank or holding tank wastewater at the Derry Township Municipal Authority wastewater treatment facility on Clearwater Road in Hershey, Dauphin County, PA.

This Permit is based on information provided in the Hauled Wastewater Discharge Permit application which together with the conditions and requirements contained in Attachments A and B constitute the Hauled Wastewater Discharge Permit. This Permit is effective for the period set forth below, may be suspended or revoked for Permit condition noncompliance and is not transferable.

The original Permit shall be kept on file in the Permitee's office. A copy of this Permit shall be carried in every registered vehicle used by the Permittee.

EFFECTIVE DATE: August 21, 1992

EXPIRATION DATE: **August 21, 1993**

☐ Check if Renewed Permit

Number of HWD Permit copies required: 1

AUTHORIZED DERRY TOWNSHIP MUNICIPAL AUTHORITY SIGNATURE

[HWDPERMT.MIS/Revised 08/92]

ATTACHMENT A

HAULED WASTEWATER DISCHARGE PERMIT PROGRAM GUIDANCE AND GENERAL PERMIT CONDITIONS

VIOLATION OF ANY OF THESE PERMIT CONDITIONS CAN RESULT IN THE SUSPENSION OR REVOCATION OF THE PERMITTEE'S DISPOSAL PRIVILEGES

1. **INTRODUCTION:** The Derry Township Municipal Authority [DTMA] has established a progam to provide for the environmentally safe, cost effective and convenient disposal of septic and holding tank wastewaters. Recognizing that the acceptance of hauled wastewaters presents certain risks including plant upsets and sludge contamination, DTMA has developed these guidelines to minimize those risks and protect its facilities.

2. **TYPES OF WASTEWATER ACCEPTED:** In general, any wastewater that is: 1) nontoxic to the biological and has no adverse impact on any physical/chemical treatment processes at the DTMA wastewater treatment plant [WWTP], and 2) is biodegradable and is determined to have no adverse impacts on the WWTP operation and discharge effluent, will be considered for acceptance. Hauled wastewaters can be categorized into three categories:

   a. Normally Acceptable Wastewaters:

      - Residential Septic Tanks
      - Residential Holding Tanks
      - Commercial holding/septic tanks used for domestic type sanitary wastewater (non-process wastewater)

   b. Conditionally Acceptable Wastewaters, Prior Approval Required (Considered on a Case by Case Basis):

      - Industrial and commercial process wastewaters

Page A-1

Revised: September 1, 1992

- Municipal Sludges if they are from biological processes and meet all State and Federal Guidelines for Agricultural-Use

- Special Wastewaters such as leachates, condensates, washwaters and others.

c. Prohibited Wastewaters:

- Any wastes as defined in Section 9.40:A.1. of the DTMA Rates, Rules and Regulations, including any flammable, explosive, or corrosive wastes and any wastewaters or sludges with unacceptable levels of metals.

In all cases, the DTMA reserves the unconditional right to accept or reject any hauled wastewater as it deems necessary to protect its employees, facilities or treatment processes. Any DTMA employee may unconditionally refuse to accept a load or stop an unloading in progress.

3. **ADMINISTRATIVE PROCEDURES:** All haulers are required to obtain a Hauled Wastewater Discharge Permit [HWDP] before discharging wastewaters at the DTMA WWTP. Permits will be issued to haulers that meet the following conditions:

- Submit a completed DTMA Permit Application Form with proof of vehicle insurance and the current HWD Permit application fee.

- For permit renewals, haulers must have a record of satisfactory compliance with all conditions and requirements of the expiring HWD Permit.

Permits will be issued for a term of one year. Haulers who have satisfactorily operated within all the conditions of their HWD Permit may submit an application for permit renewal along with the current HWD Permit application fee.

4. **MANIFESTS:** Haulers must complete and return to DTMA a Hauled Wastewater [HW] Manifest for each source of wastewater on a truck load. **All pump outs** require a completed HW Manifest including:

- Section 1: Wastewater Stream Identification - Indicating volume (in gallons), type, and source of hauled wastewater.

- Section 2: Generator of Wastewater - Indicating name, complete address, and telephone number for all pumpouts. Any wastewater that does not originate in a single family residences must also include the generator's signature.

- Section 3: Hauler of Wastewater - Indicating company name, HWD Permit number, vehicle license number, pumpout date, and signature.

- Section 4: Acceptance by DTMA - A DTMA Representative must sign of the HW Manifest for any conditionally approved loads. The white (top) copy of the HW Manifest must be left at the DTMA WWTP.

5. **FEES:** The following fees are utilized in the hauled wastewater acceptance program. The actual fee is set forth in the Rate Schedule of the most current edition of the DTMA Rates, Rules and Regulations [RR&R].

- Permit Application Fee

- Permit Renewal Application Fee

- Disposal Fee

- Laboratory Analysis Fee

The disposal fee is a rate per 1,000 gallons of hauled wastewater as set forth in the DTMA RR&R Rate Schedule, Section V. Charges for disposal will be based on this rate, multiplied by the registered usable capacity of a vehicle. Regardless of the volume of hauled wastewater accepted, charges will be based on full tank load capacity only. Partial loads will be considered as full loads. Fees for the laboratory analysis of any wastewater will be made in accordance with the current edition of the DTMA RR&R Rate Schedule, Section IV.C.1 & 2.

6. **COMPLIANCE:** An HWD Permit and the associated disposal privileges may be suspended or revoked immediately for any violation of the HWD Permit conditions.

ATTACHMENT B

HAULED WASTEWATER DISCHARGE PERMIT
SPECIFIC PERMIT CONDITIONS

VIOLATION OF ANY OF THESE PERMIT CONDITIONS CAN RESULT IN THE SUSPENSION OR REVOCATION OF THE PERMITTEE'S DISPOSAL PRIVILEGES

1. Hauled wastewaters will be accepted from 7:30 am until 5:00 pm, Monday through Friday and from 8:00 am until 12:00 noon on Saturday.

2. The DTMA inlet connection is a 4" male cam-lock quick connect. DTMA will provide 2 feet of 4" hose with female cam-lock quick connects on both ends. Any additional hose or special adapters will be the responsibility of the Permittee.

3. Care shall be taken when connecting, disconnecting or unloading to prevent the spillage of any materials around the hauled wastewater acceptance station. It is the responsibility of the Permittee and their employees to leave the hauled wastewater acceptance station in a satisfactory condition. If necessary, the area shall be washed down by the Permittee [or their employees] before departing the site.

4. The original Hauled Wastewater Permit shall be kept in the owner's office file. Each registered hauling vehicle shall carry a copy of the Permit at all times. A DTMA representative may request to see the Permit at any time.

5. All Permittees shall use a DTMA Hauled Wastewater (HW) Manifest for each pump out. All pump-outs must include completed HW Manifest including:

   - Section 1: Wastewater Stream Identification - Information indicating volume (in gallons), type and source of hauled wastewater.

   - Section 2: Generator of Wastewater - Information indicating name, complete address, and telephone number for all pumpouts. Any wastewater that does not originate in a single family residence must also include the generator's signature.

   - Section 3: Hauler of Wastewater - Indicating company name, HWD Permit number, vehicle license number, pumpout date, and signature.

   - Section 4: Acceptance by DTMA - A DTMA Representative must sign of the HW Manifest for any conditionally approved loads. The white (top) copy of the HW Manifest must be left at the DTMA WWTP. All manifests must be stamped with the DTMA date/time clock located at the hauled wastewater accptance receiving desk.

6. A DTMA representative may request information concerning the origin, and nature of the contents of any registered vehicle. In addition, the Permittee shall allow the DTMA to

immediately obtain a sample of the wastewater from any vehicle. The Permittee shall comply with all information requests concerning the load. This may include but is not limited to the following information; pick up points, volumes, and wastewater characteristics.

7. This permit shall be valid only when all other Federal State or Local permits required by the Permittee for transporting wastewaters are valid and current. In addition, the Permittee's vehicle insurance shall be kept current. Expired vehicle insurance coverage will result in the suspension of disposal privileges.

8. The Permittee shall immediately report in writing to the DTMA any changes in business name, ownership, address/telephone number, and registered vehicles. Changes to vehicles include but are not limited to: the modification of previously registered vehicles, the addition of vehicles, or the deletion of vehicles.

9. In the case of multiple pump-outs included as one vehicle load, any part of the load that is prohibited or restricted shall constitute an entire load that is unacceptable for discharge.

10. The DTMA reserves the unconditional right to refuse acceptance of any load or stop an unloading operation in progress at any time. Any DTMA employee may unconditionally refuse to accept a load or stop an unloading in progress.

11. All vehicles used by the Permittee to haul wastewater shall be registered with DTMA. Any vehicle additions, deletions or modifications shall immediately be reported in writing to the DTMA. The written notification shall include vehicle license number, make and model of vehicle, tank capacity and the nature of the modifications. The use of a registered hauled wastewater vehicle for the transportation or storage of hazardous materials, liquid petroleum fuels, waste oil, petroleum derivative wastes or corrosives is specifically prohibited.

12. The discharge of any materials as defined in the DTMA Rates, Rules and Regulations Section 9.40:A.1. is specifically prohibited. These wastes include but are not limited to; flammables, explosives, corrosives, or wastes with unacceptable levels of metals. Any violation on the part of the Permittee or their representatives with the conditions of this permit or any portion of the Authority's Rates, Rules and Regulations shall be cause for immediate suspension or revocation of the HW Permit and associated disposal privileges. In addition, such violations shall be cause for legal prosecution by the DTMA under prevailing law.

13. The disposal fee will be based on the current rate per 1000 gallons (as set forth in the latest edition of the DTMA Rate Schedule, Section V) times the registered usable capacity of a vehicle. Charges will be based on vehicle full load capacity only. Partial loads will be considered as full loads. Fees for laboratory analyses (if any) will be made is accordance with the latest edition of the DTMA Rate Schedule, Section IV.C.1 & 2.

14. Port-a-let (jiffy john, etc.) wastewaters are considered to be conditionally acceptable hauled wastewater. Under no circumstances will these wastewaters be accepted if they contain any formalin or formaldehyde based deodorizers. Current MSDs for all deodorizers used by the permittee must be kept on file with DTMA.

15. Invoices will be prepared at the beginning of each month for the previous month's disposal charges and will be due within 25 days. A 5% delinquent payment charge will be added to any invoices unpaid by the due date.

DERRY TOWNSHIP MUNICIPAL AUTHORITY
HAULED WASTEWATER DISCHARGE PROGRAM
MULTIPLE MANIFEST LOAD SUMMARY

DISCHARGE DATE/TIME STAMP

NAME OF HAULER: _____

DISCHARGE VEHICLE LICENSE NUMBER: _____ HWD PERMIT # _____

HW MANIFEST NUMBER	PUMPOUT VOLUME

TOTAL VOLUME DISCHARGED

I CERTIFY THAT THE INFORMATION LISTED ON THIS MANIFEST LOAD SUMMARY IS TRUE, ACCURATE AND COMPLETE TO THE BEST OF MY KNOWLEDGE. I AM AWARE OF THE CONDITIONS AND REQUIREMENTS OF MY HAULED WASTE DISCHARGE PERMIT AND UNDERSTAND THAT FAILURE TO COMPLY WITH THOSE CONDITIONS AND REQUIREMENTS MAY RESULT IN THE IMMEDIATE SUSPENSION OR REVOCATION OF MY PERMIT AND ITS DISPOSAL PRIVILEGES AS WELL AS THE ENFORCEMENT OF POSSIBLE PENALTIES AS MAY BE ALLOWED BY LAW.

_____
SIGNED (DRIVER)

NOTE:
THIS FORM IS TO BE USED WHEN MULTIPLE PUMP OUTS ARE TRANSFERRED TO ANOTHER VEHICLE PRIOR TO DISPOSAL AT THE DTMA FACILITY.

ATTACH ALL INDIVIDUAL PUMP OUT MANIFESTS TO THIS SHEET

HWDMNFST.WQ1 [Revised 12/92]

Derry Township Municipal Authority
P. O. Box 447
Hersheypark Dr. & Clearwater Rd.
Hershey, PA 17033-0447
(717) 566-3237
FAX 566-7934

↑ DATE/TIME STAMP ↑

MANIFEST ID 32501

HAULED WASTEWATER DISCHARGE MANIFEST

1. **WASTEWATER STREAM IDENTIFICATION (Sections 1A, 1B, & 1C must be completed by generator or hauler)**

A. Volume: _____ gallons B. Type: Holding Tank ☐ Septic Tank ☐ Other ☐

C. Source: Home/Apt ☐ Office/Commercial ☐ Restaurant ☐ Portable Toilet ☐ Industrial ☐ Other ☐

Description of Other and special handling instructions, if any: _____

2. **GENERATOR OF WASTEWATER (Sections 2A, 2B, & 2C must be completed by generator or hauler)**

A. Complete Name (print or type): _____ B. Phone No.: _____

C. Complete Pickup Address: _____

ALL WASTEWATERS ARE SUBJECT TO THE RULES AND REGULATIONS AND TERMS AND CONDITIONS OF THE DERRY TOWNSHIP MUNICIPAL AUTHORITY.

The undersigned being duly authorized does hereby certify to the accuracy of the source and type of hauled wastewater identified above and subject to this manifest. **SECTION D GENERATOR SIGNATURE REQUIRED FOR ALL NON-DOMESTIC LOADS.**

Date: _____ D. Signature: _____

3. **HAULER OF WASTEWATER (Sections 3A, 3B, 3C, 3D, and 3E must be completed by hauler)**

A. Company Name (print or type): _____

B. HWD Permit # _____ C. Vehicle License No. _____ D. Pump Out Date: _____

The above described wastewater was picked up and hauled by me to the disposal facility name below and was discharged. I certify under penalty of perjury that the foregoing is true and correct.

E. Signature of authorized agent and title: _____

4. **ACCEPTANCE BY DERRY TOWNSHIP MUNICIPAL AUTHORITY (must be completed by disposer)**

The above hauler delivered the described wastewater to this disposal facility and it was accepted.

Disposal Date: _____ Sample ID# _____ (if required)

Signature of authorized agent and title: _____ (required for non-domestic loads)

White Sheet - Disposer Yellow Sheet - Hauler Pink Sheet - Generator

*U.S. Government Printing Office: 1994 — 550-001/00171

United States
Environmental Protection Agency
Center for Environmental Research Information
Cincinnati, OH 45268

Official Business
Penalty for Private Use
$300

EPA/625/R-94/002

Please make all necessary changes on the below label, detach or copy, and return to the address in the upper left-hand corner.

If you do not wish to receive these reports CHECK HERE ☐; detach, or copy this cover, and return to the address in the upper left-hand corner.

BULK RATE
POSTAGE & FEES PAID
EPA
PERMIT No. G-35